User's Guide

SLAU289A–December 2009–Revised May 2010

TAS5615PHD2EVM

This user's guide describes the operation of the evaluation module for the TAS5615PHD2EVM 160-W, stereo feedback, analog-input, digital amplifier from Texas Instruments. The document also provides measurement data and design information including the schematic, bill of materials, and printed-circuit board layout.

Contents

1 Overview 3
1.1 TAS5615PHD2EVM Features 4
1.2 PCB Key Map 4
2 Quick Setup Guide 5
2.1 Electrostatic Discharge Warning 5
2.2 Unpacking the EVM 5
2.3 Power Supply Setup 6
2.4 Applying Input Signal 6
2.5 Speaker Connection 6
2.6 Output Configuration BTL and PBTL 7
3 Protection 8
3.1 Short-Circuit Protection and Fault-Reporting Circuitry 8
3.2 Fault Reporting 8
4 TAS5615PHD2EVM Performance 8
4.1 THD+N vs Power, BTL – 8 Ω 10
4.2 THD+N vs Power, PBTL – 4 Ω 10
4.3 THD+N vs Frequency, BTL – 8 Ω 11
4.4 THD+N vs Frequency, PBTL – 4 Ω 11
4.5 FFT Spectrum with –60-dBFS Tone, BTL 11
4.6 Idle Noise FFT Spectrum, BTL 12
4.7 FFT Spectrum With –60-dBFS Tone, PBTL 12
4.8 Idle Noise FFT Spectrum, PBTL 13
4.9 Channel Separation 13
4.10 Frequency Response, BTL 14
4.11 Frequency Response, PBTL 14
4.12 High-Current Protection, BTL 15
4.13 High-Current Protection, PBTL 15
4.14 Pop/Click, BTL 16
4.15 Pop/Click, PBTL 16
4.16 Output Stage Efficiency 17
5 Related Documentation from Texas Instruments 17
5.1 Additional Documentation 18
Appendix A Design Documents 19

List of Figures

1 Integrated PurePath™ HD Amplifier System 4
2 Physical Structure for the TAS5615PHD2EVM (Approximate Layout) 5
3 Output Configuration BTL and PBTL 7
4 THD+N vs Power, BTL – 8 Ω 10

PurePath is a trademark of Texas Instruments.

Copyright © 2009–2010, Texas Instruments Incorporated

5 THD+N vs Power, PBTL – 4 Ω 10
6 THD+N vs Frequency, BTL – 8 Ω 11
7 THD+N vs Frequency, BTL – 4 Ω 11
8 FFT Spectrum with –60-dBFS Tone, BTL 12
9 Idle Noise FFT Spectrum, BTL 12
10 FFT Spectrum With –60-dBFS Tone, PBTL 13
11 Idle Noise FFT Spectrum, PBTL 13
12 Channel Separation, BTL 14
13 Frequency Response, BTL 14
14 Frequency Response, PBTL 15
15 High-Current Protection, BTL 15
16 High-Current Protection, PBTL 16
17 Pop/Click, BTL 16
18 Pop/Click, PBTL 17
19 Output Stage Efficiency 17

List of Tables

1 Table 1. TAS5615PHD2EVM Specification 3
2 Recommended Supply Voltages 6
3 TAS5615 Warning/Error Signal Decoding 8
4 General Test Conditions 8
5 Electrical Data 9
6 Audio Performance 9
7 Thermal Specification 9
8 Physical Specifications 9
9 Related Documentation From Texas Instruments 18

Copyright © 2009–2010, Texas Instruments Incorporated

1 Overview

The TAS5615PHD2EVM PurePath™ HD customer evaluation module demonstrates the integrated circuit TAS5615PHD2 from Texas Instruments (TI).

The TAS5615PHD is a high-performance, integrated stereo feedback, analog-input, digital amplifier, power stage designed to drive 8-Ω speakers at up to 160 W per channel. This amplifier requires only a simple, passive demodulation filter to deliver high-quality, high-efficiency audio amplification.

This EVM is configured with two BTL channels and the possibility to apply either a single-ended or a differential analog input signal.

The OPA1632 is a high-performance, fully differential, audio operational amplifier designed to operate with single-ended or differential input signals to the EVM.

This EVM is a complete stereo analog input, 2 × 160-W power amplifier ready for evaluation and great music.

Table 1. Table 1. TAS5615PHD2EVM Specification

Key Parameters	
Output stage supply voltage	25 V – 50 V
Number of channels	2
Load impedance	8 Ω
Output power, 8 Ω, 10% THD	160 W
Dynamic range	>100 dB(A)
SE to differential amplifier	OPA1632D
Output stage	TAS5615PHD
Other features	+15-V onboard switcher from PVDD supply

This document covers EVM specifications, audio performance and power efficiency measurements graphs, and design documentation that includes schematics, parts list, layout, and mechanical design.

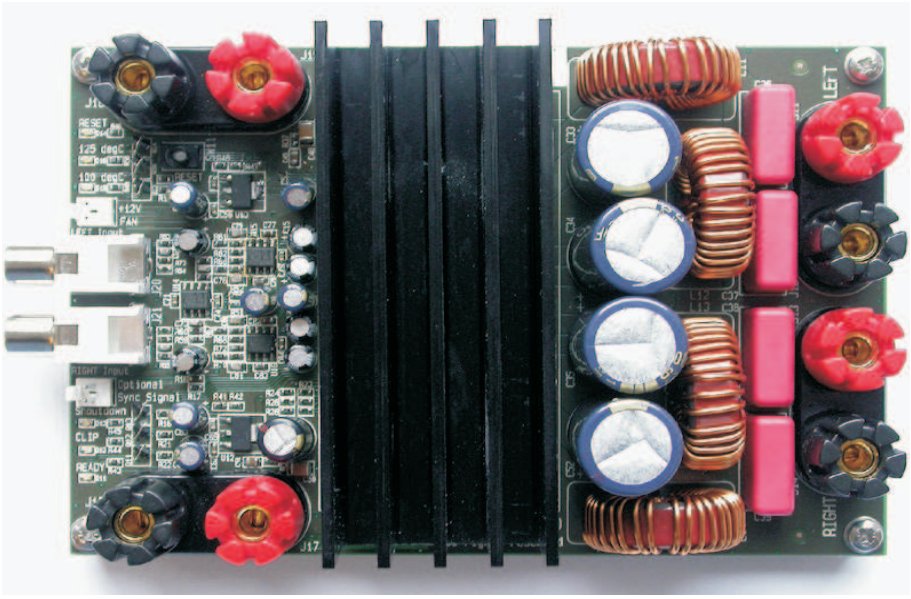

Copyright © 2009–2010, Texas Instruments Incorporated

1.1 TAS5615PHD2EVM Features

- Stereo PurePath™ HD evaluation module.
- Self-contained protection system (short circuit and thermal).
- Standard 1-VRMS, single-ended line input or differential input.
- Double-sided, plated-through PCB layout.

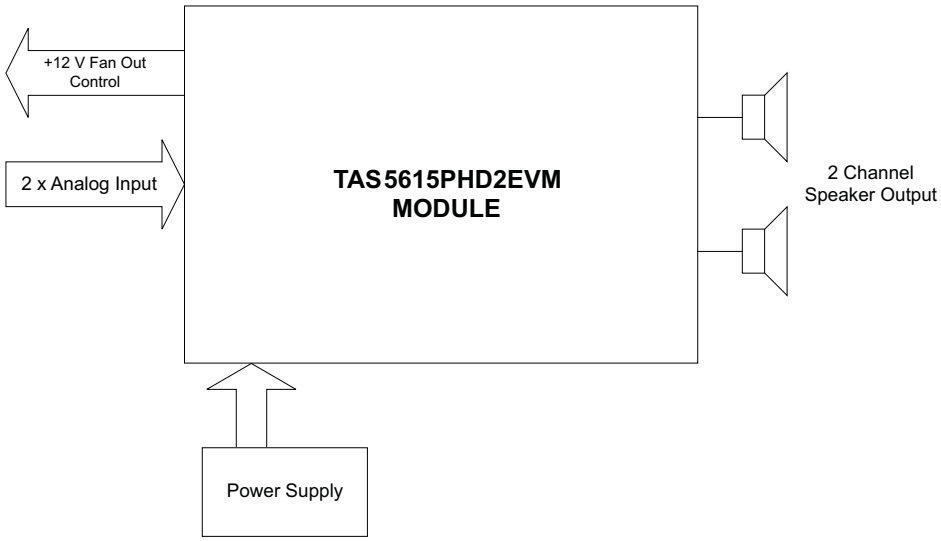

Figure 1. Integrated PurePath™ HD Amplifier System

1.2 PCB Key Map

Physical structure for the TAS5615PHD2EVM is illustrated in Figure 2.

Copyright © 2009–2010, Texas Instruments Incorporated

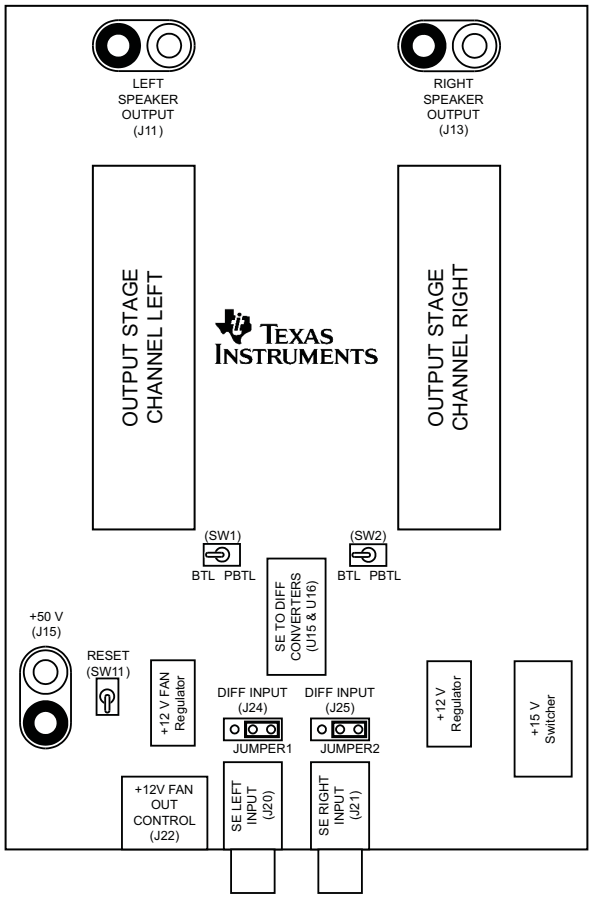

Figure 2. Physical Structure for the TAS5615PHD2EVM (Approximate Layout)

2 Quick Setup Guide

This section describes the TAS5615PHD2EVM board in regards to power supply and system interfaces. The section provides information regarding handling and unpacking, absolute operating conditions, and a description of the factory default switch and jumper configuration.

This section provides a step–by–step guide to configuring the TAS5615PHD2EVM for device evaluation

2.1 Electrostatic Discharge Warning

Many of the components on the TAS5615PHD2EVM are susceptible to damage by electrostatic discharge (ESD). Customers are advised to observe proper ESD handling precautions when unpacking and handling the EVM, including the use of a grounded wrist strap at an approved ESD workstation.

CAUTION

Failure to observe ESD handling procedures may result in damage to EVM components.

2.2 Unpacking the EVM

On opening the TAS5615PHD2EVM package, ensure that the following items are included:

- 1 pc. TAS5615PHD2EVM board using one TAS5615PHD.

Copyright © 2009–2010, Texas Instruments Incorporated

If any of the items are missing, contact the Texas Instruments Product Information Center nearest you to inquire about a replacement.

2.3 Power Supply Setup

To power up the EVM, one power supply is needed. An onboard, switched voltage regulator supplies system power, logic, and gate-drive. The power supply is connected to the EVM using connector J15.

NOTE: When powering up, set switch SW11 to the RESET position.

Table 2. Recommended Supply Voltages

Description	Voltage Limitations	Current Requirement	Cable
Output stage power supply	25 V – 50 V	16 A	J15 (marked +50V)

CAUTION

Applying voltages above the limitations given in may cause permanent damage to your hardware

NOTE: The length of power supply cable must be minimized. Increasing length of PSU cable is equal to increasing the distortion for the amplifier at high output levels and low frequencies.

2.4 Applying Input Signal

It is possible to apply either a single-ended input signal to J20 and J21 or a differential input signal to J24 and J25.

NOTE: If a single-ended input signal is applied, insert jumpers in the header J24 and J25.

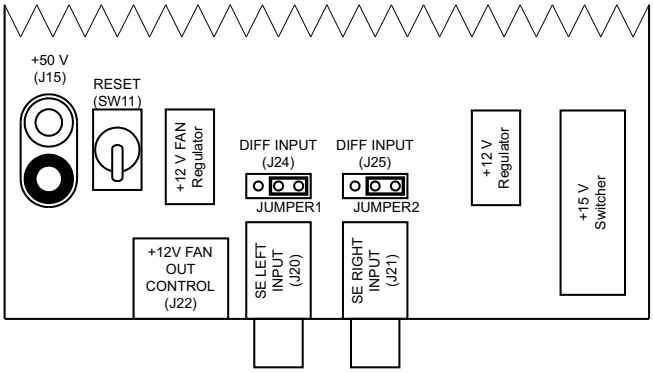

2.5 Speaker Connection

CAUTION

Both positive and negative speaker outputs are floating and may not be connected to ground (e.g., through an oscilloscope).

Copyright © 2009–2010, Texas Instruments Incorporated

2.6 Output Configuration BTL and PBTL

When changing mode e.g. from BTL to PBTL make sure that RESET switch (SW11) is activated before changing the state of mode switches SW1 and SW2. Switch SW1 and SW2 has to be synchronized in state BTL or PBTL. Input signal to RCA connector J20 when operating PBTL mode.

J21 is disabled. In PBTL mode, the load has to be connected according to Figure 3:

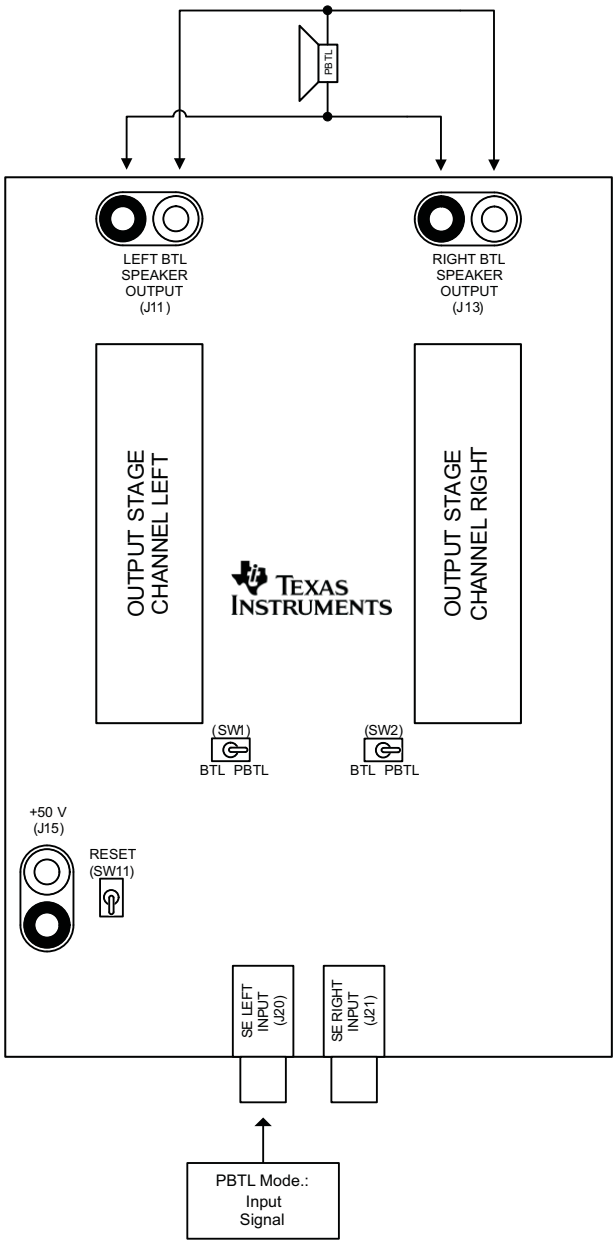

Figure 3. Output Configuration BTL and PBTL

Copyright © 2009–2010, Texas Instruments Incorporated

3 Protection

This section describes the short-circuit protection and fault-reporting circuitry of the TAS5615 device.

3.1 Short-Circuit Protection and Fault-Reporting Circuitry

The TAS5615 is a self-protecting device that provides fault reporting (including high-temperature protection and short-circuit protection). The TAS5615 is configured in back-end, auto-recovery mode, and therefore; resets automatically after all errors (M1, M2, and M3 are set low); see the data sheet (SLAS595) for further explanation. This means that the device restarts itself after an error occasion and reports through the $\overline{SD}$ error signal.

3.2 Fault Reporting

The $\overline{OTW}$ and $\overline{SD}$ outputs from TAS5615 indicate fault conditions. See the TAS5615 data sheet for a description of these pins.

Table 3. TAS5615 Warning/Error Signal Decoding

$\overline{SD}$	$\overline{OTW1}$	$\overline{OTW2}$	Device Condition
0	0	0	High-temperature error and/or high-current error
0	0	1	Undervoltage lockout or high current error. 100°C temperature warning.
0	1	1	Undervoltage lockout or high-current error
1	0	0	125°C temperature warning
1	0	1	100°C temperature warning
1	1	1	Normal operation, no errors/warnings

The shutdown signals together with the temperature warning signal give chip-state information as described in the Table 3. Device fault-reporting outputs are open-drain outputs.

4 TAS5615PHD2EVM Performance

Table 4. General Test Conditions

General Test Conditions		Notes
Output stage supply voltage:	50 V	Laboratory power supply (EA-PS 7065-10A)
Load impedance:	8 Ω	
Input signal:	1- kHz sine	
Measurement filters:	AES17 and AUX0025	
Note: These test conditions are used for all tests, unless otherwise specified.		

Copyright © 2009–2010, Texas Instruments Incorporated

Table 5. Electrical Data

Electrical Data		Notes/Conditions
Output power, 1% THD+N, BTL, 8 Ω:	140 W	1 kHz, T_A = 25°C
Output power, 10% THD+N, BTL, 8 Ω:	170 W	1 kHz, T_A = 25°C
Output power, 1% THD+N, PBTL, 4 Ω:	270 W	1 kHz, T_A = 25°C
Output power, 10% THD+N, PBTL, 4 Ω:	330 W	1 kHz, T_A = 25°C
Maximum peak current, BTL:	>7 A	1-kHz burst, 1 Ω, R_{OC} = 22 kΩ
Maximum peak current, PBTL:	>10 A	1-kHz burst, 1 Ω, R_{OC} = 22 kΩ
Output stage efficiency:	>90%	2 x channels, 8 Ω
Damping factor	27	1 kHz, relative to 8-Ω load
H-bridge supply current:	50 mA	1 kHz, input grounded
Idle power consumption:	<3 W	H-bridge supply, input grounded

Table 6. Audio Performance

Audio Performance			Notes/Conditions
THD+N, BTL, 8 Ω:	1 W	<0.03 %	1 kHz
THD+N, BTL, 8 Ω:	10 W	<0.05 %	1 kHz
THD+N, BTL, 8 Ω:	50 W	<0.05 %	1 kHz
THD+N, BTL, 8 Ω:	100 W	<0.10 %	1 kHz
THD+N, BTL, 4 Ω:	1 W	<0.05 %	1 kHz
THD+N, BTL, 4 Ω:	10 W	<0.05 %	1 kHz
THD+N, BTL, 4 Ω:	50 W	<0.05 %	1 kHz
THD+N, BTL, 4 Ω:	100 W	<0.10 %	1 kHz
Dynamic range:		>100 dB	Ref: rated power, A-weighted, AES17 filter, 2 ch avg
Noise voltage:		320 μV_{rms}	A-weighted, AES17 filter
Click/pop, DC step:		<30 mV	Mute/unmute, no signal, 4 Ω
Channel separation, BTL:		>89 dB	1 kHz
Frequency response:		±0.5 dB	100 W / 8 Ω, unclipped

Table 7. Thermal Specification

Thermal Specification**	$T_{HEATSINK}$*	Notes/Conditions
Idle, all channels switching	30°C	1 kHz, 15 min, input grounded, T_A = 25°C
2 x 16 W, 8 Ω (1/8 power)	42°C	1 kHz, 1 hour, T_A = 25°C
2 x 100 W, 8 Ω	60°C	1 kHz, 5 min, T_A = 25°C

*Measured on surface of heatsink

** During the thermal test the heatsink has been ventilated with a fan (NMB-MAT Type: 2410ML-04W-B50) connected to J22.

Table 8. Physical Specifications

Physical Specifications		Notes/Conditions
PCB dimensions:	90 × 140 × 55	Width × length × height (mm)
Total weight:	400 gr	Components + PCB + heatsink + mechanics

Note: All electrical and audio specifications are typical values.

Copyright © 2009–2010, Texas Instruments Incorporated

4.1 THD+N vs Power, BTL – 8 Ω

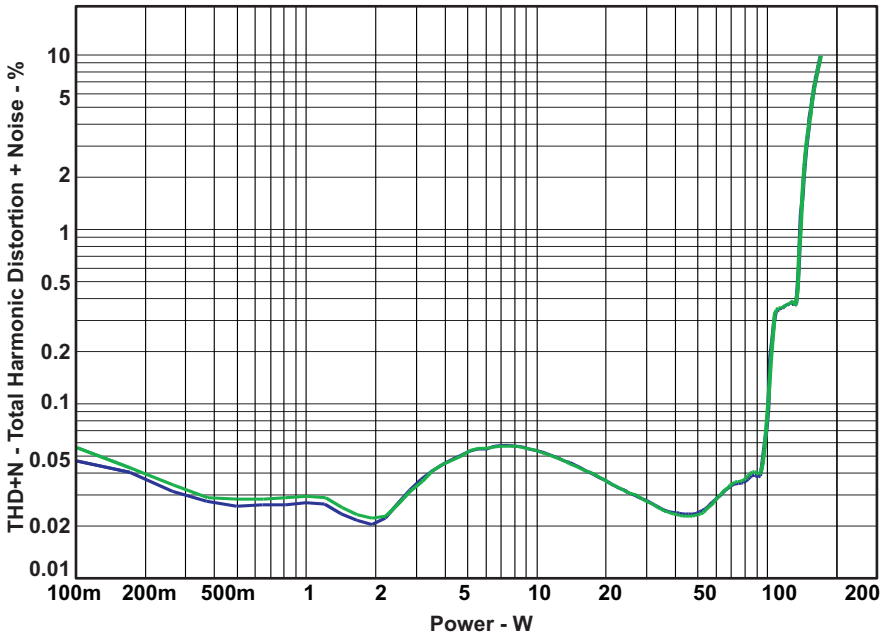

Figure 4. THD+N vs Power, BTL – 8 Ω

4.2 THD+N vs Power, PBTL – 4 Ω

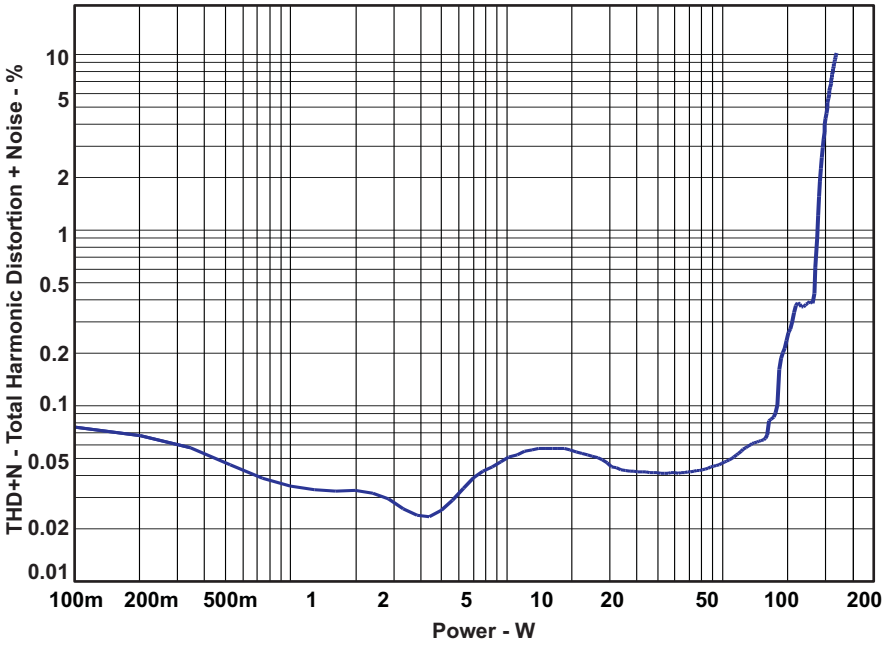

Figure 5. THD+N vs Power, PBTL – 4 Ω

Copyright © 2009–2010, Texas Instruments Incorporated

4.3 THD+N vs Frequency, BTL – 8 Ω

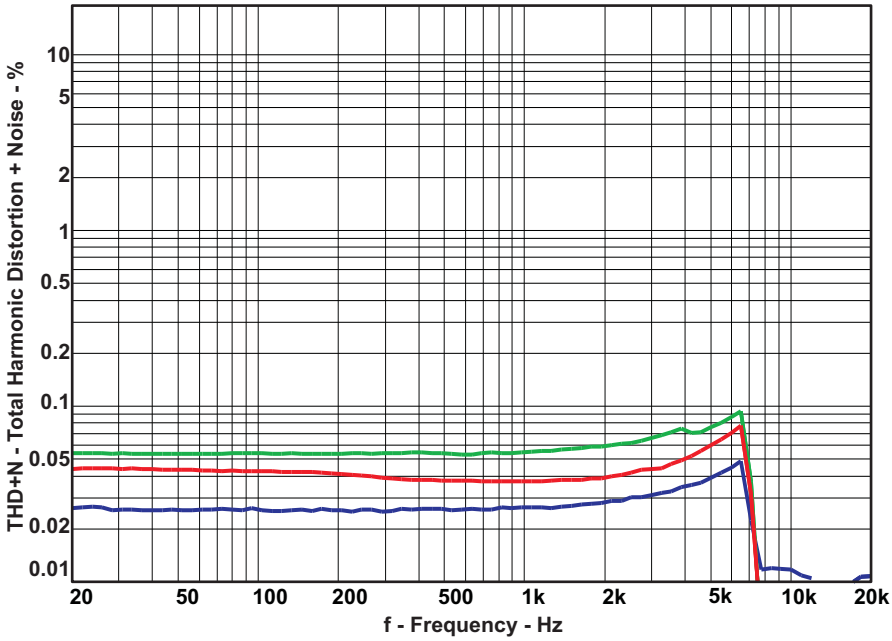

Figure 6. THD+N vs Frequency, BTL – 8 Ω

4.4 THD+N vs Frequency, PBTL – 4 Ω

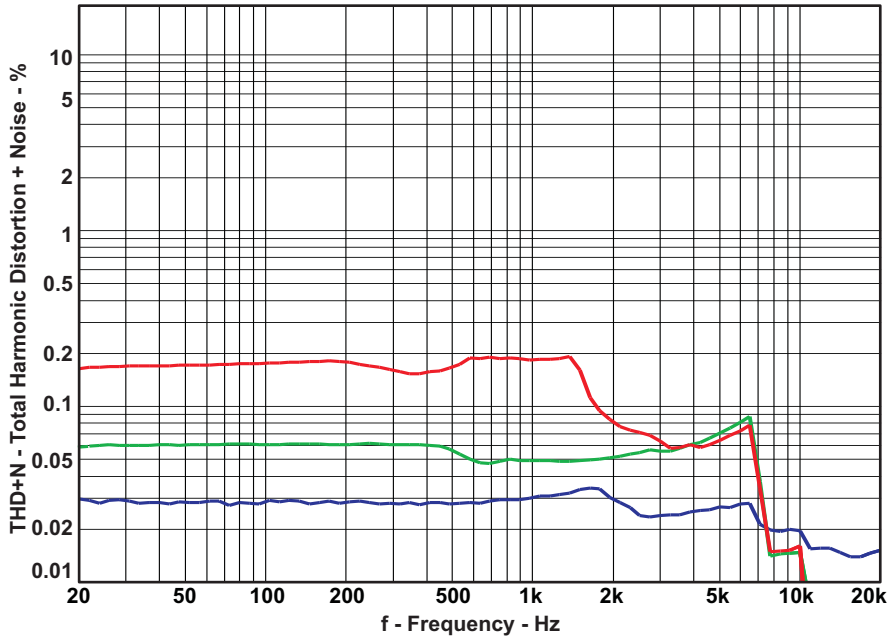

Figure 7. THD+N vs Frequency, BTL – 4 Ω

4.5 FFT Spectrum with –60-dBFS Tone, BTL

Reference voltage is 28.3 V. FFT size 16k.

Copyright © 2009–2010, Texas Instruments Incorporated

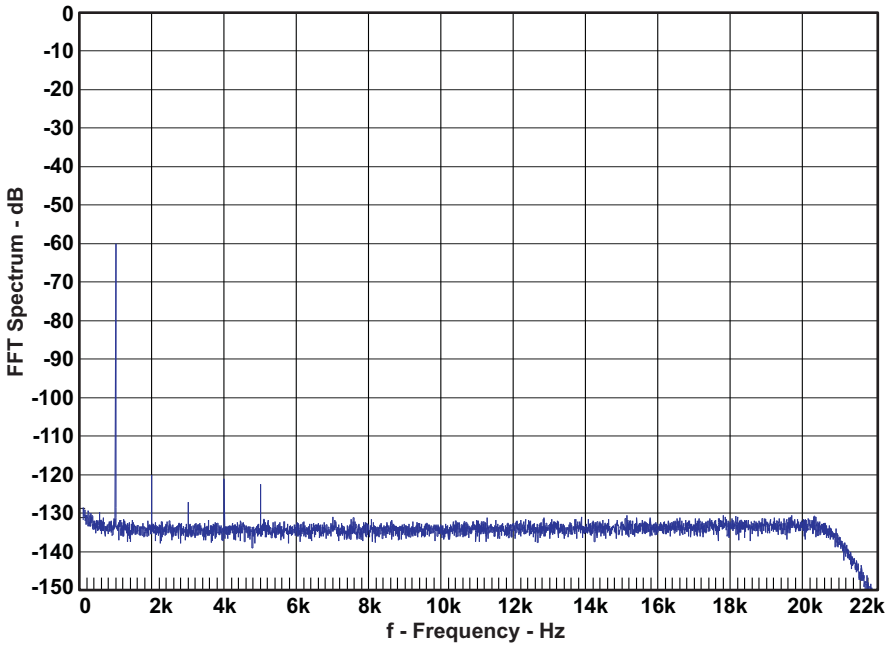

Figure 8. FFT Spectrum with –60-dBFS Tone, BTL

4.6 Idle Noise FFT Spectrum, BTL

Input is grounded; reference voltage is 28.3 V. FFT size 16k.

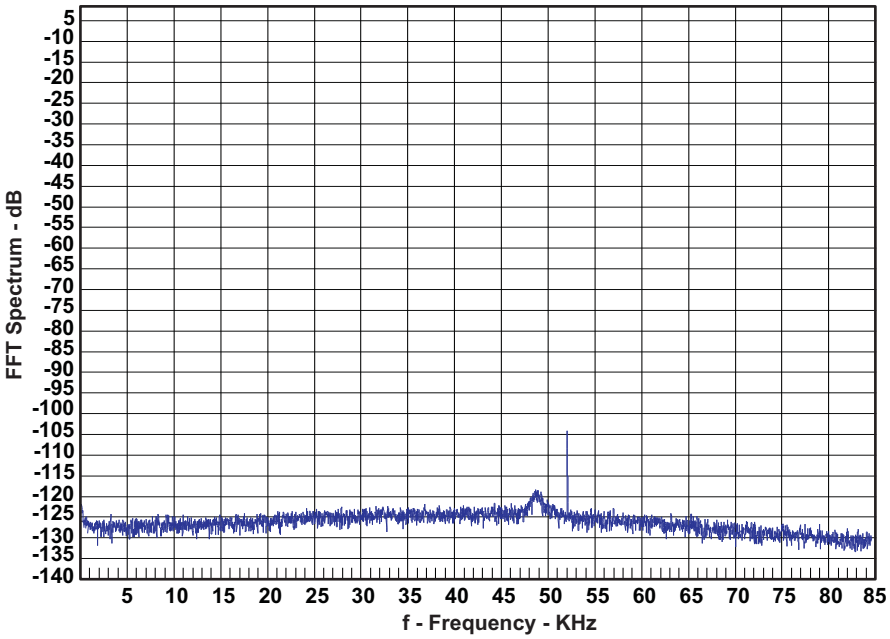

Spurious tone at 52 kHz has its origin from the TL2575 switching voltage regulator.

Figure 9. Idle Noise FFT Spectrum, BTL

4.7 FFT Spectrum With –60-dBFS Tone, PBTL

Reference voltage is 28.3 V. FFT size 16k.

Copyright © 2009–2010, Texas Instruments Incorporated

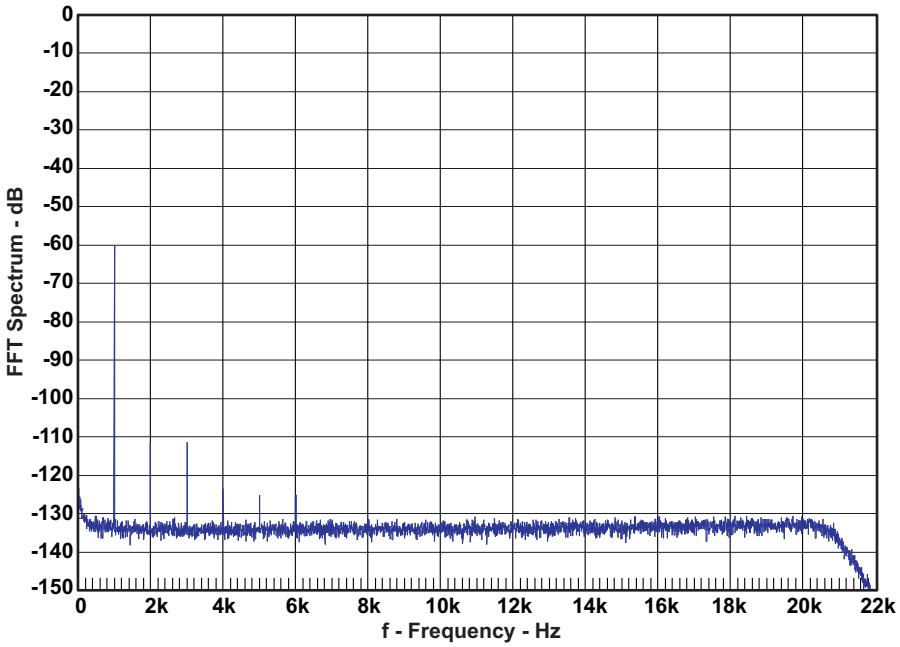

Figure 10. FFT Spectrum With –60-dBFS Tone, PBTL

4.8 Idle Noise FFT Spectrum, PBTL

Input is grounded; reference voltage is 28.3 V. FFT size 16k.

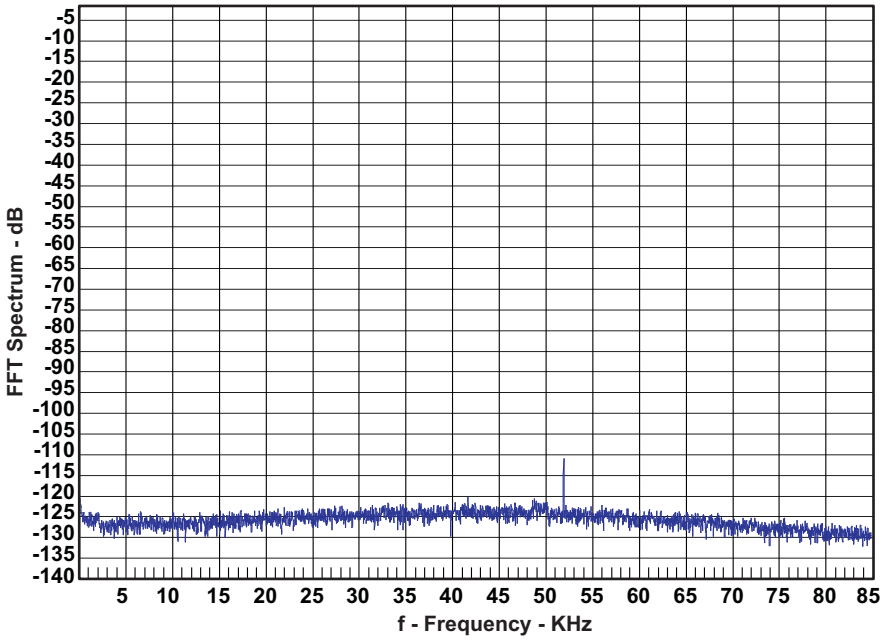

Spurious tone at 52 kHz has its origin from the TL2575 switching voltage regulator.

Figure 11. Idle Noise FFT Spectrum, PBTL

4.9 Channel Separation

Channel 1 input signal is set corresponding to 100 W/8 Ω.
Channel 2 input is grounded; reference voltage is 28.3 Vrms.

Copyright © 2009–2010, Texas Instruments Incorporated

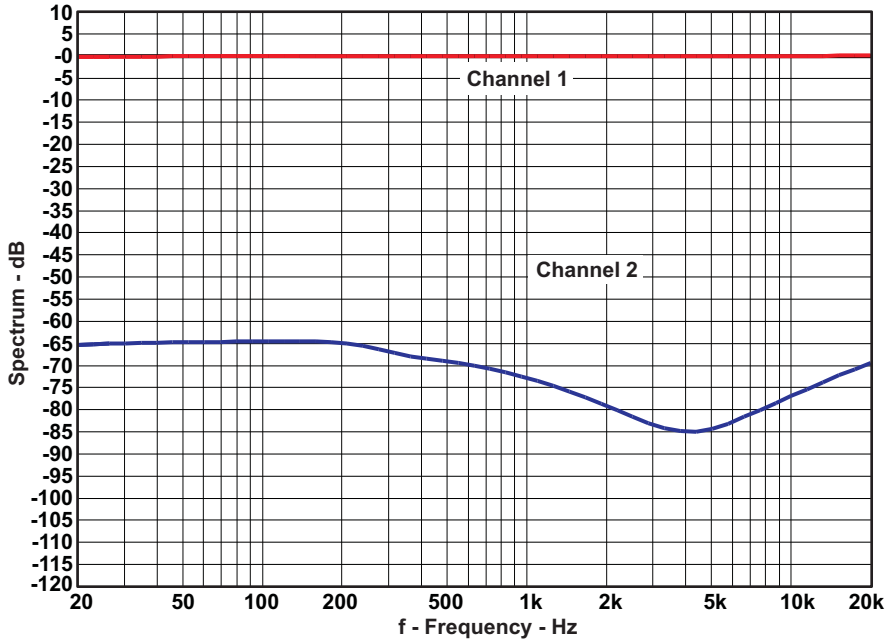

Figure 12. Channel Separation, BTL

4.10 Frequency Response, BTL

Measurement bandwidth filter is 80 kHz.

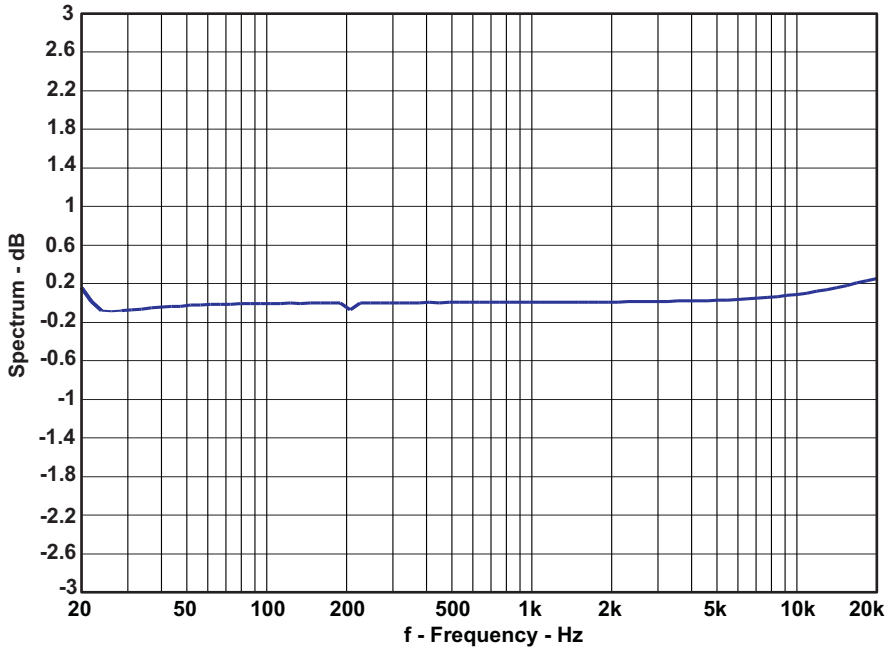

Figure 13. Frequency Response, BTL

4.11 Frequency Response, PBTL

Measurement bandwidth filter 80 kHz.

Copyright © 2009–2010, Texas Instruments Incorporated

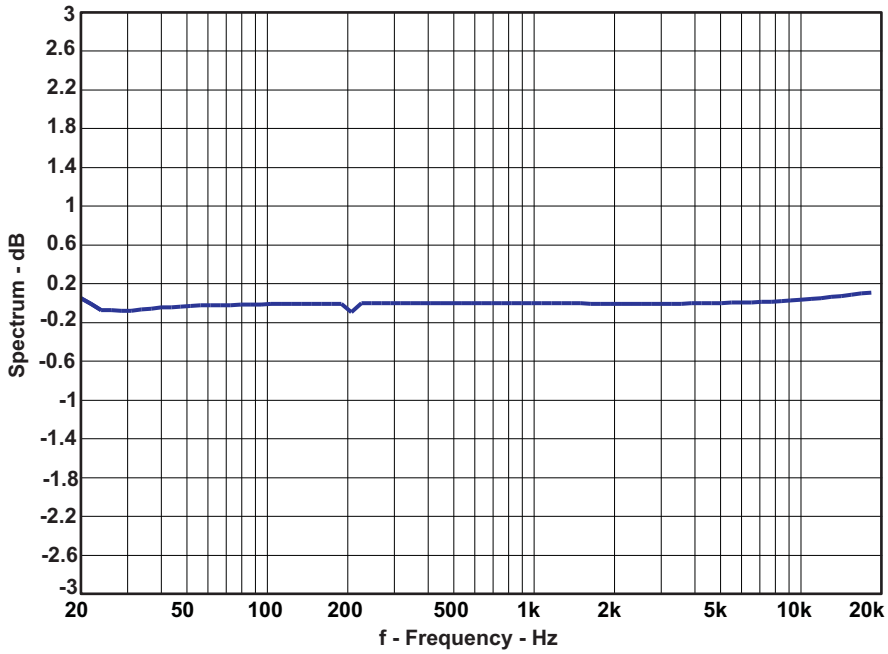

Figure 14. Frequency Response, PBTL

4.12 High-Current Protection, BTL

Input is 1-kHz bursted signal; load is 1 Ω.

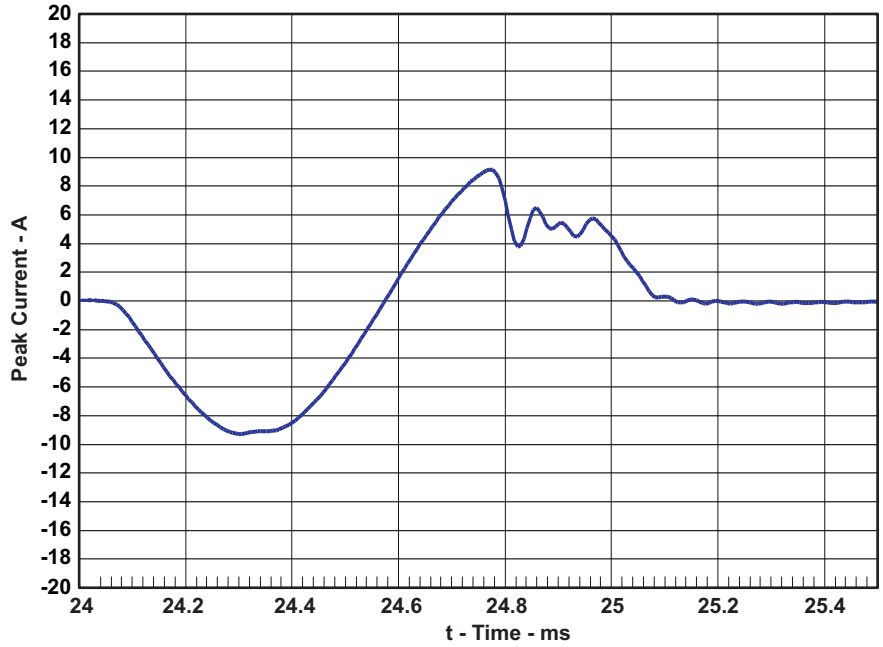

Figure 15. High-Current Protection, BTL

4.13 High-Current Protection, PBTL

Input is 1-kHz bursted signal; load is 1 Ω.

Copyright © 2009–2010, Texas Instruments Incorporated

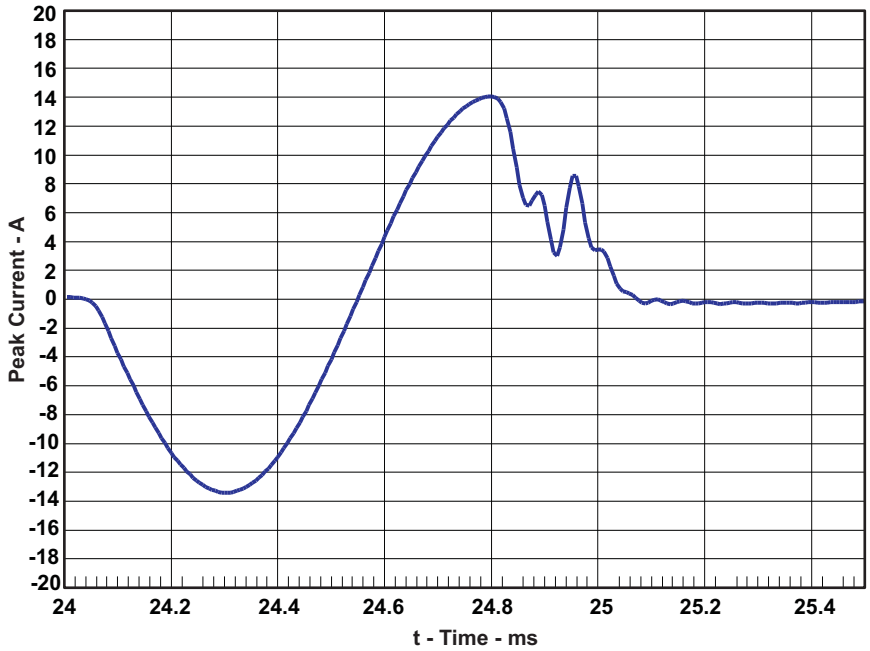

Figure 16. High-Current Protection, PBTL

4.14 Pop/Click, BTL

No input signal is applied. The measurement results are presented in frequency domain.

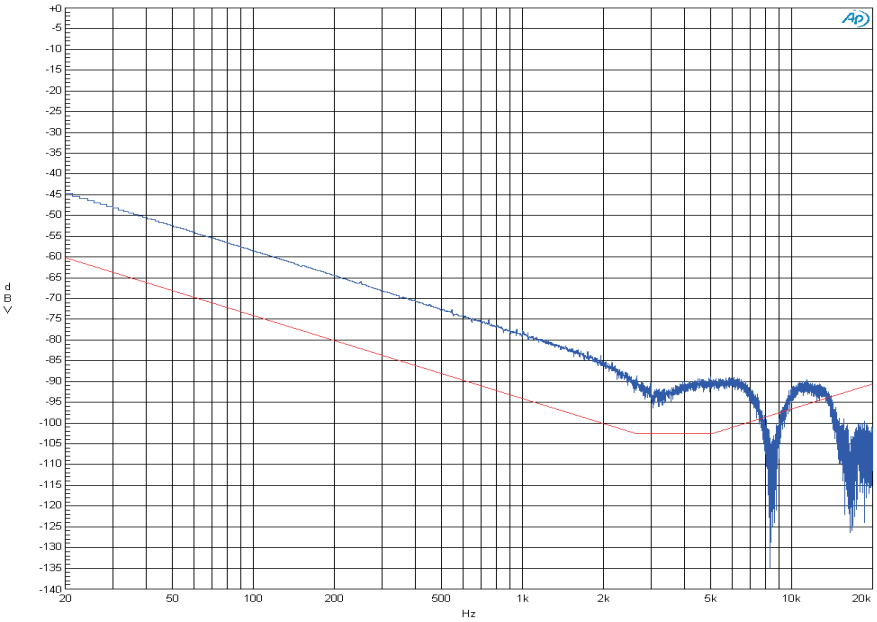

Figure 17. Pop/Click, BTL

4.15 Pop/Click, PBTL

Input signal is applied. The measurement results are presented in frequency domain.

Copyright © 2009–2010, Texas Instruments Incorporated

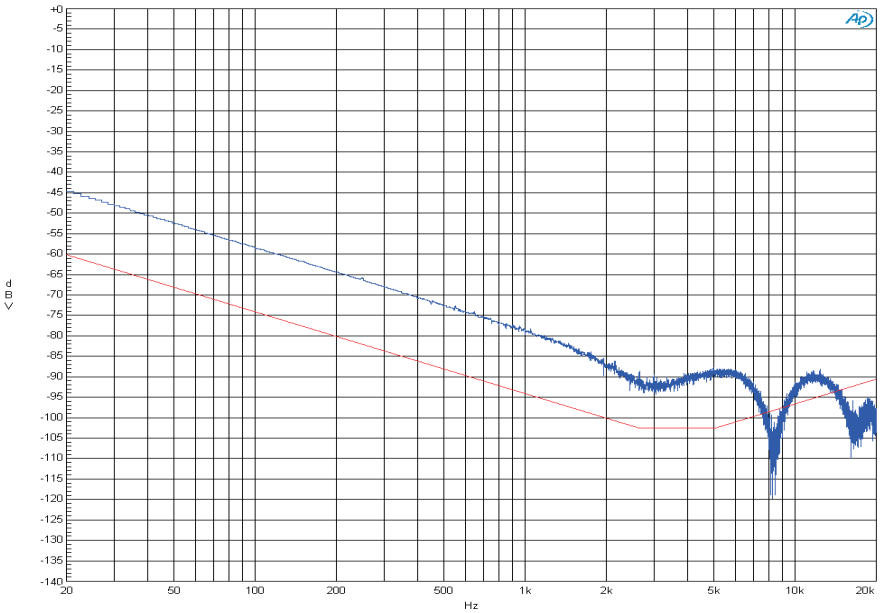

Figure 18. Pop/Click, PBTL

4.16 Output Stage Efficiency

Efficiency is tested with two BTL channels loaded, 8 Ω.

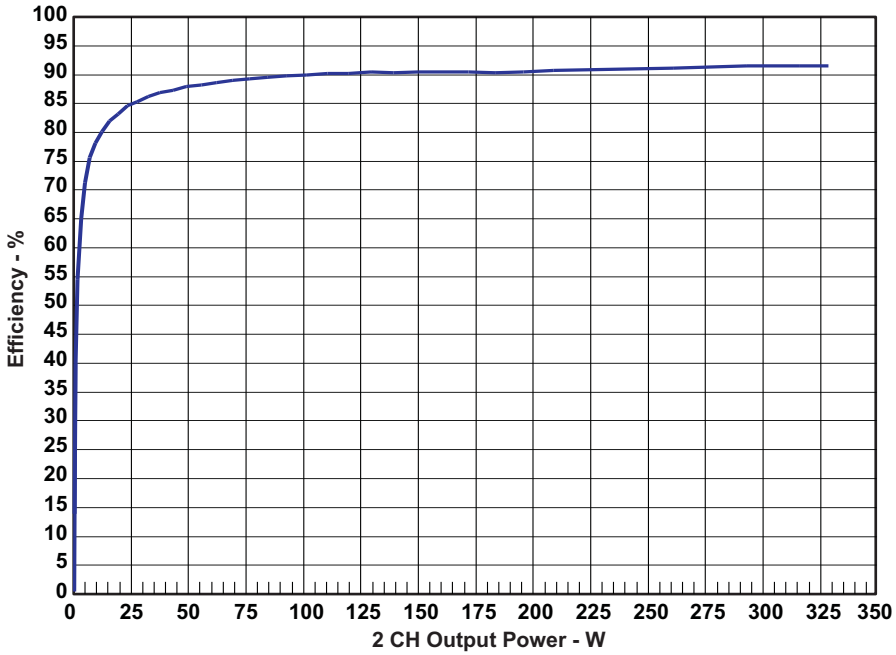

Figure 19. Output Stage Efficiency

5 Related Documentation from Texas Instruments

Table 9 contains a list of data sheets that have detailed descriptions of the integrated circuits used in the design of the TAS5615PHD2EVM. These data sheets can be obtained at the TI Web site http://www.ti.com.

Copyright © 2009–2010, Texas Instruments Incorporated

Table 9. Related Documentation From Texas Instruments

Part Number	Literature Number
TAS5615	SLAS595
OPA1632	SBOS286
LM317M	SLVS297
TL2575HV	SLVS638

5.1 Additional Documentation

1. *System Design Considerations for True Digital Audio Power Amplifiers* application report (SLAA117)
2. *Digital Audio Measurements* application report (SLAA114)
3. *PSRR for PurePath Digital™ Audio Amplifiers* application report (SLEA049)
4. *Power Rating in Audio Amplifiers* application report (SLEA047)
5. *PurePath Digital™ AM Interference Avoidance* application report (SLEA040)
6. *Click and Pop Measurements Technique* application report (SLEA044)
7. *Power Supply Recommendations for DVD-Receivers* application report (SLEA027)
8. *Implementation of Power Supply Volume Control* application report (SLEA038)

Copyright © 2009–2010, Texas Instruments Incorporated

Appendix A Design Documents

This appendix comprises the following design elements.

- Schematic (4 pages)
- Parts List (2 pages)
- PCB Specification (1 page)
- PCB Layers (6 pages)
- Heatsink Drawing (1 page)

Copyright © 2009–2010, Texas Instruments Incorporated

Design Name:	**TAS5615PHD2EVM**
Type:	Mass Market EVM
File Name:	A847-SCH-001.DSN
Version:	5.00
Date:	5.May 2009
Design Engineer:	Kim N Madsen (knm@ti.com), Jonas Holm (jlh@ti.com)
Audio Configuration:	PurePath Premire Pro Digital Amplifier Design 1 x TAS5615PHD
Interfaces:	J20-J21: Single Ended Analog Audio Input J11, J13: Banana Bindingposts For Speakers J15: Banana Bindingpost For H-Bridge Supply
Setup:	8 Ohm (BTL) Speaker Loads +50 V H-Bridge Supply Voltage
Performance:	2 x 160 W / 8 Ohm (BTL) 10% THD+N > 102 dB Dynamic Range

Page

1/4: Front Page and Schematic Disclaimer
2/4: TAS5615 Amplifier
3/4: Input Stage
4/4: Mechanics

NOTE1

SCHEMATIC DISCLAIMER

The preliminary schematic information and materials ("Materials") provided here are provided by Texas Instruments Incorporated ("TI") as a service to its customers and/or suppliers, and may be used for informational purposes only, and only subject to the following terms. By downloading or viewing these Materials, you are signifying your assent to these terms.

1.) These preliminary evaluation schematics are intended for use for PRELIMINARY ENGINEERING DEVELOPMENT AND EVALUATION PURPOSES ONLY and are not considered by Texas Instruments to be fit as a basis for establishing production products or systems. This information may be incomplete in several respects, including but not limited to information relating to required design, marketing, and/or manufacturing-related protective considerations and product safety measures typically found in the end-product incorporating the goods.

2.) Accordingly, neither TI nor its suppliers warrant the accuracy or completeness of the information, text, graphics, links or other items contained within the Materials. TI may make changes to the Materials, or to the products described therein, at any time without notice. TI makes no commitment to update the Materials.

3.) TI assumes no liability for applications assistance, customer product design, software performance, or services that may be described or referenced in the Materials. The user assumes all responsibility and liability for proper and safe design and handling of goods. Accordingly, the user indemnifies TI from all claims arising from its use of the Materials.

4.) TI currently deals with various customers for products, and therefore our arrangement with the user will not be exclusive. TI makes no representations regarding the commercial availability of non-TI components that may be referenced in the Materials.

5.) No license is granted under any patent right or other intellectual property right of TI covering or relating to any combination, machine, or process in which such TI products or services might be or are used. Except as expressly provided herein, TI and its suppliers do not grant any express or implied right to you under any patents, copyrights, trademarks, or trade secret information.

6.) Performance tests and ratings, to the extent referenced in the Materials, are measured using specific computer systems and/or components and reflect the approximate performance of TI products as measured by those tests. Any difference in system hardware or software design or configuration may affect actual performance. Buyers should consult other sources of information to evaluate the performance of systems or components they are considering purchasing.

7.) Resale of TI's products or services with statements different from or beyond the parameters stated by TI for that product or service in official TI data books or data sheets voids all express and any implied warranties for the associated TI product or service, and is an unfair and deceptive business practice, and TI is not responsible for any such use.

8.) The Materials are copyrighted and any unauthorized use may violate copyright, trademark, and other laws. You may only download one copy for your internal use only, unless you are specifically licensed to do otherwise by TI in writing. This is a license, not a transfer of title, and is subject to the following restrictions: You may not: (a) modify the Materials (including any associated warranties, conditions, limitations or notices) or use them for any commercial purpose, or any public display, performance, sale or rental; (b) decompile, reverse engineer, or disassemble software Materials except and only to the extent permitted by applicable law; (c) remove any copyright or other proprietary notices from the Materials; (d) transfer the Materials to another person. You agree to prevent any unauthorized copying of the Materials. TI may terminate this license at any time if you are in breach of the terms of this Agreement. Upon termination, you will immediately destroy the Materials.

9.) THE MATERIALS ARE PROVIDED "AS IS" WITHOUT ANY EXPRESS OR IMPLIED WARRANTY OF ANY KIND INCLUDING WARRANTIES OF MERCHANTABILITY, NONINFRINGEMENT OF INTELLECTUAL PROPERTY, OR FITNESS FOR ANY PARTICULAR PURPOSE. IN NO EVENT SHALL TI OR ITS SUPPLIERS BE LIABLE FOR ANY DAMAGES WHATSOEVER (INCLUDING, WITHOUT LIMITATION, DAMAGES FOR LOSS OF PROFITS, BUSINESS INTERRUPTION, LOSS OF INFORMATION) ARISING OUT OF THE USE OF OR INABILITY TO USE THE MATERIALS, EVEN IF TI HAS BEEN ADVISED OF THE POSSIBILITY OF SUCH DAMAGES.

Not Used

/ TAS5615 Parts list 5.00

Texas Instruments	AUDIO/IMAGING GROUP Home Audio Amplifiers ALL RIGHTS RESERVED TEXAS INSTRUMENTS INCORPORATED	
Project: TAS5630PHD2EVM		Rev: 5.00
Page Title: Disclaimer		Size: A3
File Name: A844-SCH-001.DSN	Engineer: Jonas L. Holm	
Date: Wednesday, May 06, 2009		Page: 1 of 4

Copyright 2008 Texas Instruments, Inc - All rights reserved - The TI and PurePath Digital logos are trademarks of Texas Instruments.

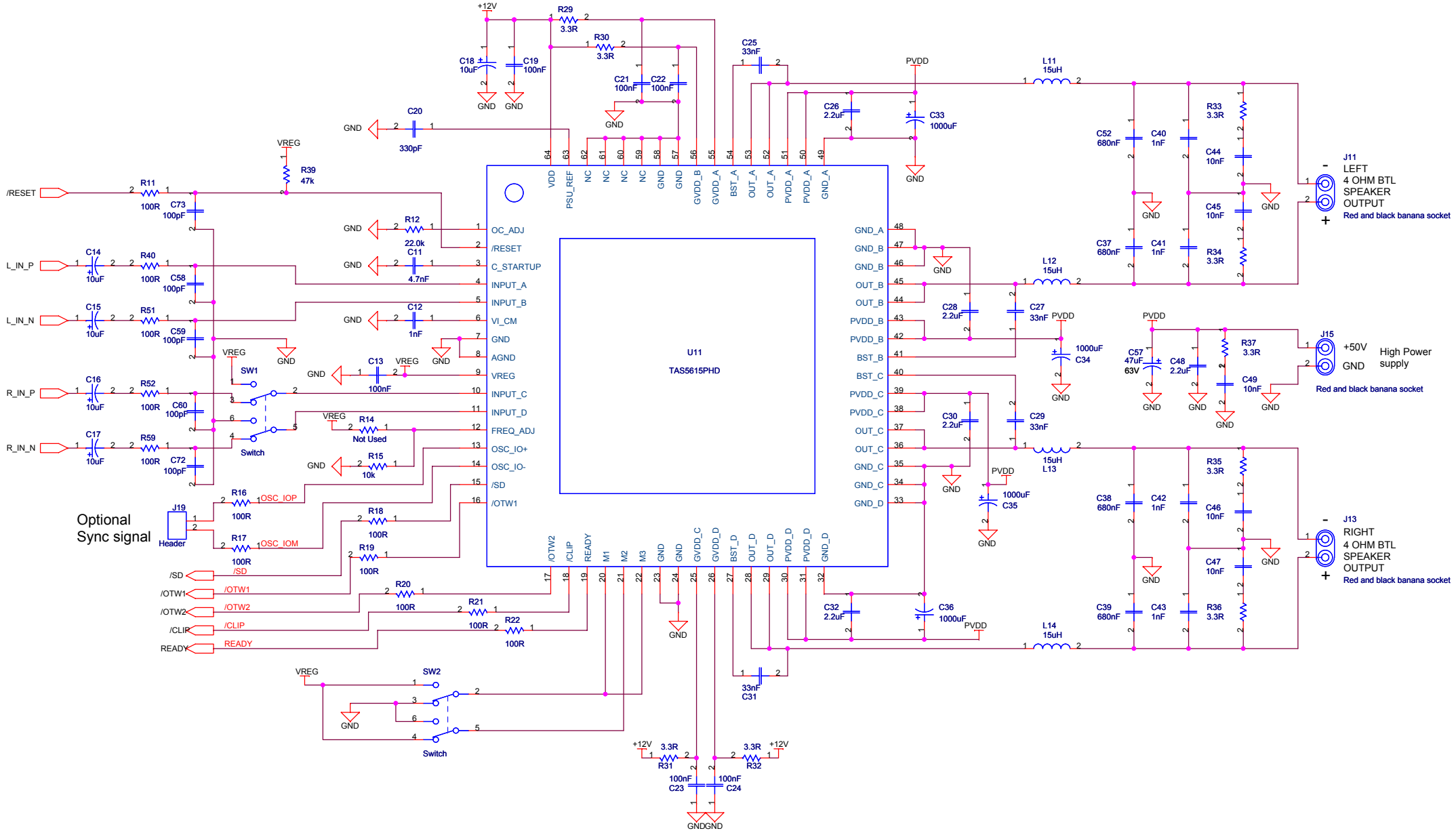

TAS5615 Parts list 5.00

TEXAS INSTRUMENTS

AUDIO/IMAGING GROUP
Home Audio Amplifiers
ALL RIGHTS RESERVED
TEXAS INSTRUMENTS INCORPORATED

Project: TAS5630PHD2EVM	Rev: 5.00
Page Title: Main Schematic	Size: A3
File Name: A844-SCH-001.DSN	Engineer: Jonas L. Holm
Date: Monday, May 25, 2009	Page: 2 of 4

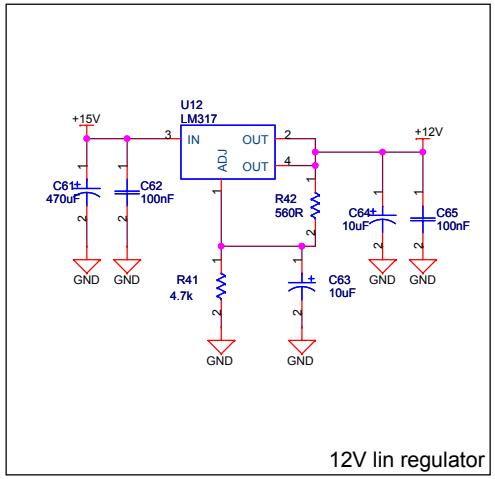

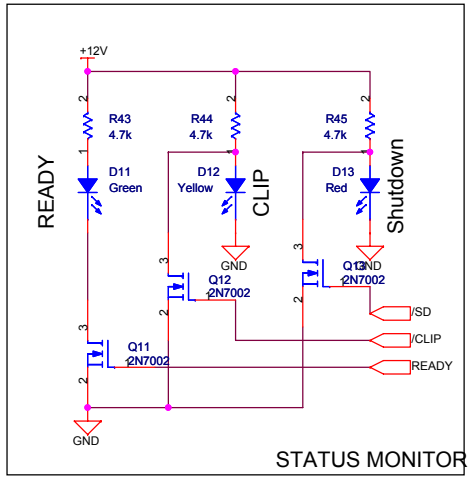

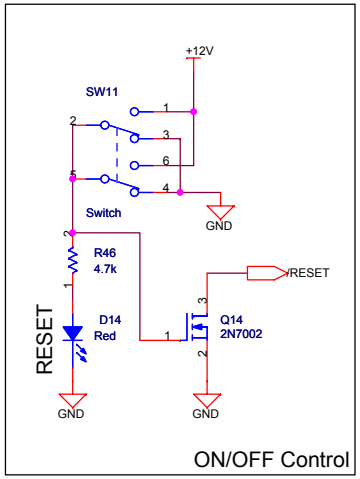

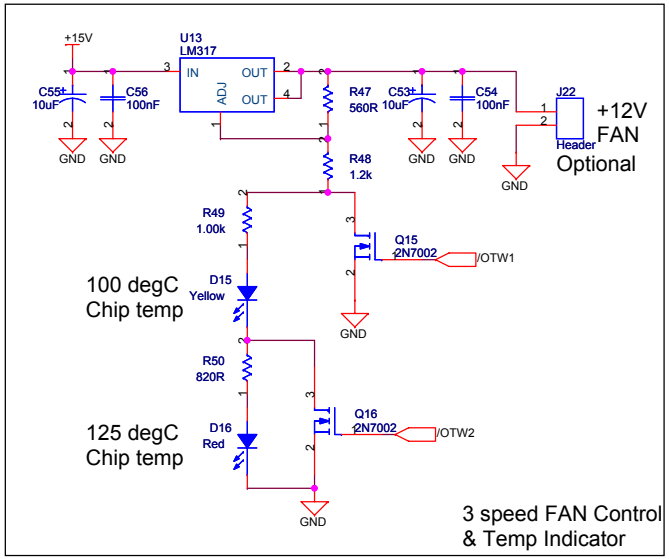

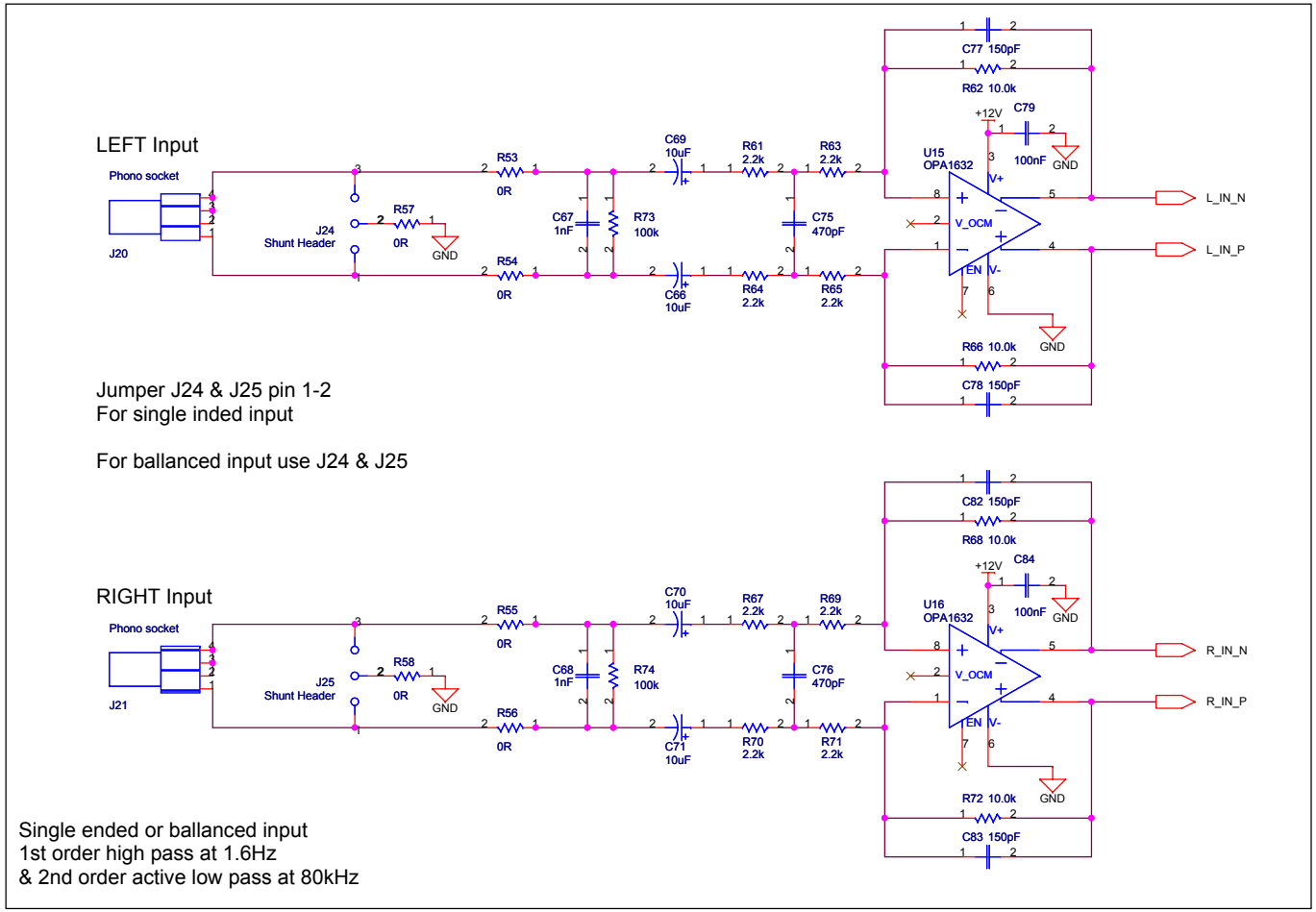

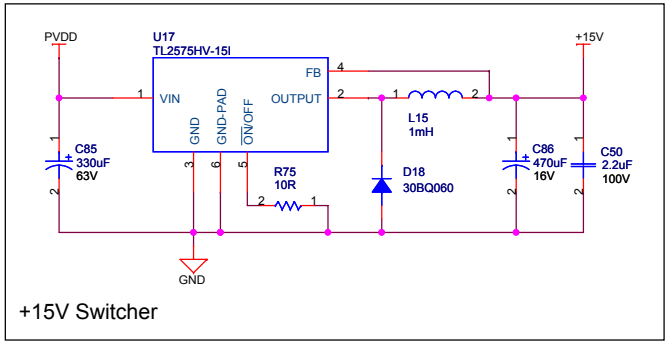

TAS5615 Parts list 5.00

TEXAS INSTRUMENTS	AUDIO/IMAGING GROUP Home Audio Amplifiers ALL RIGHTS RESERVED TEXAS INSTRUMENTS INCORPORATED
Project: TAS5630PHD2EVM	Rev: 5.00
Page Title: Input Stage	Size: A3
File Name: A844-SCH-001.DSN	Engineer: Jonas L. Holm
Date: Wednesday, May 06, 2009	Page: 3 of 4

MECHANICS

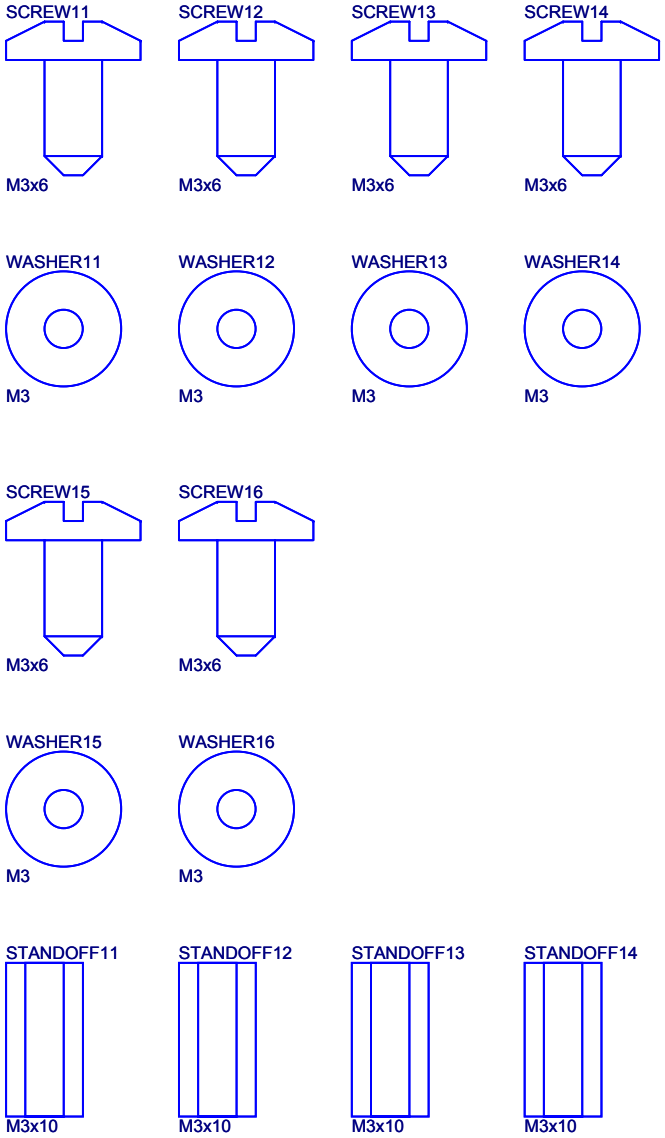

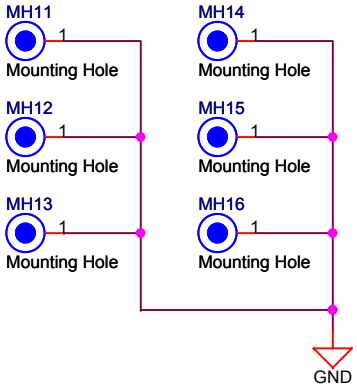

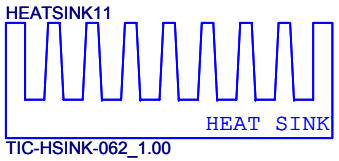

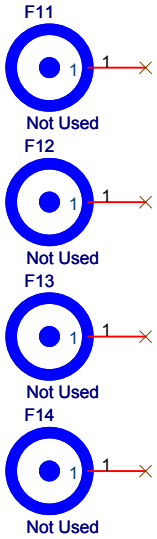

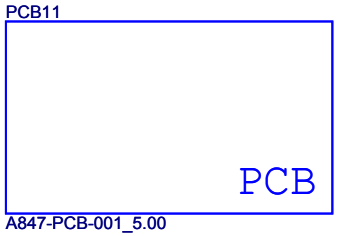

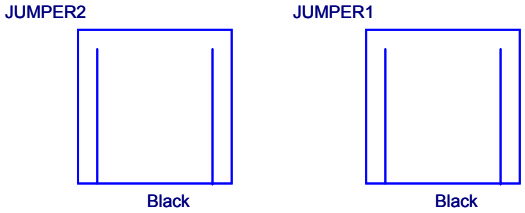

/ TAS5615 Parts list 5

TEXAS INSTRUMENTS

AUDIO/IMAGING GROUP
Home Audio Amplifiers

ALL RIGHTS RESERVED
TEXAS INSTRUMENTS INCORPORATED

Project: TAS5630PHD2EVM	Rev: 5.00
Page Title: Mechanics	Size: A4
File Name: A844-SCH-001.DSN	Engineer: Jonas L. Holm
Date: Wednesday, May 06, 2009	Page: 4 of 4

Qty	Part Reference	Description	Manufacture	First Mfr P/N
6	R53 R54 R55 R56 R57 R58	0R / 5% / 0603 Thick Film Resistor	Yageo	RC0603JR-070RL
12	R11 R16 R17 R18 R19 R20 R21 R22 R40 R51 R52 R59	100R / 100mW / 5% / 0603 Thick Film Resistor	Yageo	RC0603JR-07100RL
1	R49	1.00k / 100mW / 1% / 0603 Thick Film Resistor	Yageo	RC0603FR-071KL
1	R15	10k / 100mW / 5% / 0603 Thick Film Resistor	Yageo	RC0603JR-0710KL
4	R62 R66 R68 R72	10.0k / 100mW / 1% / 0603 Thick Film Resistor	Yageo	RC0603FR-0710KL
2	R73 R74	100k / 100mW / 5% / 0603 Thick Film Resistor	Yageo	RC0603JR-07100KL
1	R75	10R / 100mW / 5% / 0603 Thick Film Resistor	Yageo	RC0603JR-0710RL
1	R48	1.2k / 100mW / 5% / 0603 Thick Film Resistor	Yageo	RC0603JR-071K2L
8	R61 R63 R64 R65 R67 R69 R70 R71	2.2k / 100mW / 5% / 0603 Thick Film Resistor	Yageo	RC0603JR-072K2L
1	R12	22.0k / 100mW / 1% / 0603 Thick Film Resistor	Yageo	RC0603FR-0722KL
9	R29 R30 R31 R32 R33 R34 R35 R36 R37	3.3R / 100mW / 5% / 0603 Thick Film Resistor	Yageo	RC0603JR-073R3L
5	R41 R43 R44 R45 R46	4.7k / 100mW / 5% / 0603 Thick Film Resistor	Yageo	RC0603JR-074K7L
1	R39	47k / 100mW / 5% / 0603 Thick Film Resistor	Yageo	RC0603JR-0747KL
2	R42 R47	560R / 100mW / 5% / 0603 Thick Film Resistor	Yageo	RC0603JR-07560RL
1	R50	820R / 100mW / 5% / 0603 Thick Film Resistor	Yageo	RC0603JR-07820RL
5	C44 C45 C46 C47 C49	Ceramic 10nF / 100V / 20% X7R 0805 Capacitor	BC Components	0805B103M101NT
1	C11	Ceramic 4.7nF / 50V / 10% X7R 0805 Capacitor	BC Components	0805B472K500NT
4	C40 C41 C42 C43	Ceramic 1nF / 100V / 10% NP0 1206 Capacitor	BC Components	1206N102K101NT
6	C26 C28 C30 C32 C48 C50	Ceramic 2.2uF / 100V / 20% X7R 1210 Capacitor	Murata	GRM32ER72A225KA35L
1	C12	Ceramic 1nF / 50V / 10% NP0 0805 Capacitor	BC Components	0805N102K500NT
12	C13 C19 C21 C22 C23 C24 C54 C56 C62 C65 C79 C84	Ceramic 100nF / 16V / 20% X7R 0603 Capacitor	Vishay	VJ0603Y104MXJ
4	C25 C27 C29 C31	Ceramic 33nF / 25V / 20% X7R 0603 Capacitor	BC Components	0603B333M250NT
5	C58 C59 C60 C72 C73	Ceramic 100pF / 50V / 10% NP0 0603 Capacitor	BC Components	0603N101K500NT
2	C67 C68	Ceramic 1nF / 50V / 10% NP0 0603 Capacitor	BC Components	0603N102K500NT
4	C77 C78 C82 C83	Ceramic 150pF / 50V / 10% NP0 0603 Capacitor	BC Components	0603N151K500NT
1	C20	Ceramic 330pF / 50V / 10% NP0 0603 Capacitor	BC Components	0603N331K500NT
2	C75 C76	Ceramic 470pF / 50V / 10% NP0 0603 Capacitor	BC Components	0603N471K500NT
4	C37 C38 C39 C52	Metal Film 680nF / 250V / 20% Polypropylene 15mm (W:8mm L:18mm) Capacitor	Wima	MKP 4 0.68uF/20%/250Vdc PCM15
13	C14 C15 C16 C17 C18 C53 C55 C63 C64 C66 C69 C70 C71	Electrolytic 10uF / 16V / 20% Aluminium 2mm ø5mm M Series - General Purpose Capacitor	Panasonic	ECA1CM100
4	C33 C34 C35 C36	Electrolytic 1000uF / 63V / 20% Aluminium 7.5mm ø16mm FC Series - Low Impedance Capacitor	Panasonic	EEUFC1J102
1	C85	Electrolytic 330uF / 63V / 20% Aluminium 5mm ø10mm FC Series - Low Impedance Capacitor	Panasonic	EEUFC1J331L
1	C57	Electrolytic 47uF / 63V / 20% Aluminium 5mm ø10mm Capacitor	BC Components	2222 136 68479
1	C86	Electrolytic 470uF / 16V / 20% Aluminium 3.5mm ø8mm Low ESR Capacitor	Rubycon	16ZL470M8x16

1	C61	Electrolytic 470uF / 25V / 20% Aluminium 3.5mm ø8mm FC Series - Low Impedance Capacitor	Panasonic	EEUFC1E471L
1	L15	1mH / 0.55A 20% (1.68R) Ferrite Inductor (12.8x12.8x8.0)	Epcos	B82477G4105M000
4	L11 L12 L13 L14	15uH / 5A (30mR) Low THD+N Ferrite Inductor	Fe-Tronic	TIC-INDC-032 (1.00)
1	D18	3A / 60V Schottky 30BQ060 Diode (SMC)	Int. Rectifier	30BQ060PBF
3	D13 D14 D16	Light Emitting Red Red LED (0603)	Toshiba	TLSU1008
1	D11	Light Emitting Green Green LED (0603)	Toshiba	TLGU1008
2	D12 D15	Light Emitting Yellow Yellow LED (0603)	Toshiba	TLYU1008
6	Q11 Q12 Q13 Q14 Q15 Q16	0.115A / 60V N-ch Power 2N7002 Mosfet (SOT-23)	Fairchild	2N7002
1	U11	TAS5615PHD / 160 W STEREO FEEDBACK ANALOG-INPUT DIGITAL AMPLIFIER (PHD64)	Texas Instruments	TAS5615PHD
2	U15 U16	OPA1632 / High-Performance, Fully-Differential Audio Opamp (SO8)	Texas Instruments	OPA1632D
2	U12 U13	LM317 / 0.5A Positive Adjustable Regulator (DCY)	Texas Instruments	LM317MDCY
1	U17	TL2575HV-15I / 15V/1-A SIMPLE STEP-DOWN SWITCHING VOLTAGE REGULATORS (KTT5)	Texas Instruments	TL2575HV-15IKTTR
6	SCREW11 SCREW12 SCREW13 SCREW14 SCREW15 SCREW16	M3x6 Pan Head, Pozidriv, A2 Screw	Bossard	BN 81882 M3x6
6	WASHER11 WASHER12 WASHER13 WASHER14 WASHER15 WASHER16	M3 Stainless Steel Spring Washer	Bossard	BN 760 M3
4	STANDOFF11 STANDOFF12 STANDOFF13 STANDOFF14	M3x10 Aluminium Stand-off	Ettinger	05.03.108
2	J19 J22	2 pins / 1 row / 2.54mm Pitch Vertical Male Friction lock Pin header Header	Molex	22-27-2021
2	JUMPER1 JUMPER2	2 pins / 1 row / 2.54mm Pitch Horizontal Female Black Shunt Black	Molex	15-29-1024
2	J20 J21	Horizontal Female w. Switch Coax Phono socket	Chunfeng	RJ843-4W
3	J11 J13 J15	2 pins / Vertical Female Banana Red and black banana socket	Cliff	TPP-3CT
2	J24 J25	3 pins / 1 row / 2.54mm Pitch Vertical Male Shunt Header Shunt Header	Samtec	TSW-107-07-T-T
3	SW1 SW2 SW11	Switch DPDT PCB Mount Switch	NKK-Nikkai	G-22-AP
1	NOTE1	Schematic Disclaimer Preliminary Note Note	n/a	n/a
1	PCB11	A847-PCB-001_5.00 / TAS5615PHD2EVM Printed Circuit Board (ver. 5.00)	Printline	A847-PCB-001(5.00)
1	HEATSINK11	TIC-HSINK-062_1.00 / Heatsink for 1 PHD package, length 78 mm	Phonotech	TIC-HSINK-062(1.00)

Jonas Holm

TAS5615PHD2EVM
PCB SPECIFICATION
Version 5.00

BOARD IDENTIFICATION:	A847-PCB-001(5.00)
BOARD TYPE:	DOUBLE-SIDED PLATED-THROUGH BOARD
LAMINATE TYPE:	FR4
LAMINATE THICKNESS:	1.6mm
TOP LAYER COPPER THICKNESS:	70µm (INCL. PLATING EXTERIOR LAYER)
BOTTOM LAYER COPPER THICKNESS:	70µm (INCL. PLATING EXTERIOR LAYER)
COPPER PLATING OF HOLES:	>25µm
MINIMUM HOLE DIAMETER	0.3 mm
SILKSCREEN COMPONENT SIDE:	WHITE - REMOVE SILKSCREEN FROM SOLDER AREA & PRE-TINNED AREAS
SILKSCREEN SOLDER SIDE:	None
SOLDER MASK COMPONENT SIDE:	GREEN
SOLDER MASK SOLDER SIDE:	GREEN
PROTECTIVE COATING:	SOLDER COATING AND CHEMICAL SILVER ON FREE COPPER
ELECTRICAL TEST:	PCB MUST BE ELECTRICAL TESTED
MANUFACTURED TO:	PERFAG 2E (www.perfag.dk)
APERTURE TABLE:	PERFAG 10A (www.perfag.dk)
BOARD SIZE:	95 x 140 mm
Aprox. Number of holes	880
COMMENTS:	SEE DRILL INFORMATION FILE (A847-PCB-001(5.00).pdf)

COMPONENT SIDE	DpS 5376 090520
TI Denmark A847-PCB-001 (5.00)	

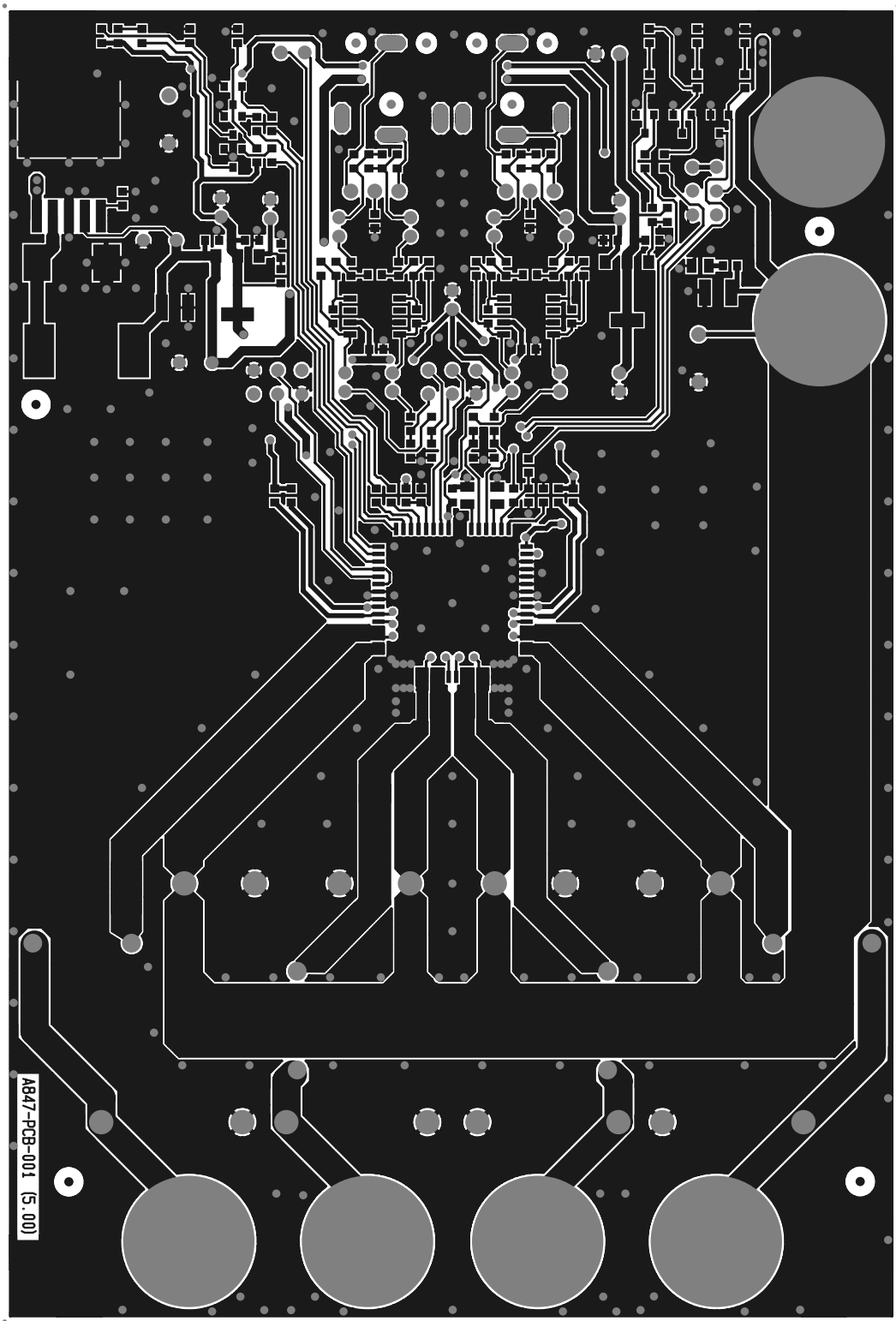

COMP. LAYOUT COMP	DpS 5376 090520
TI Denmark A847-PCB-001 (5.00)	

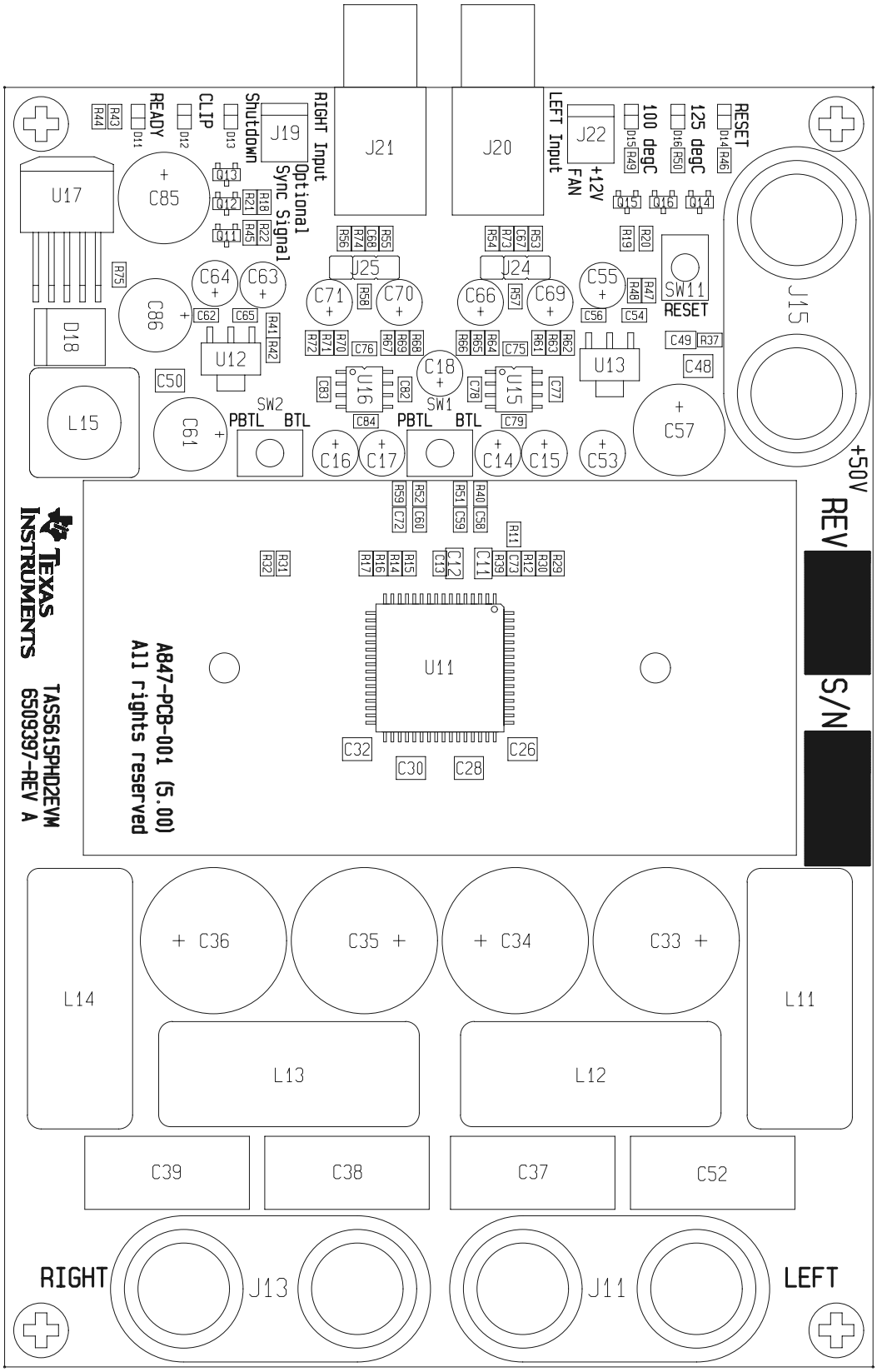

COMP. LAYOUT COMP	DpS 5376 090520
TI Denmark A847-PCB-001 (5.00)	

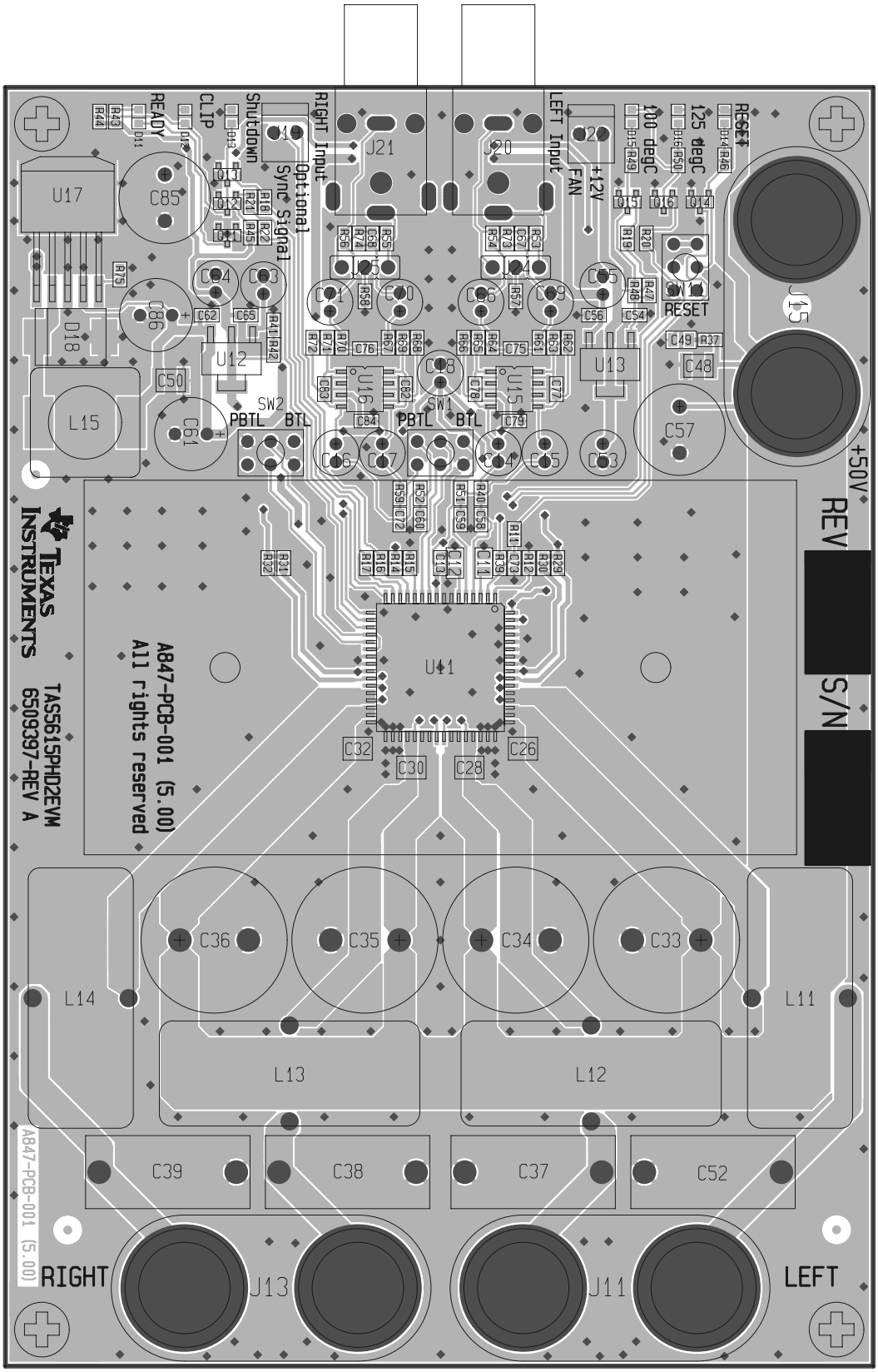

SOLDER SIDE		Dps 3276 090520
TI Demmark A847-PCB-001 (5.00)		

COMP. LAYOUT SOLD	Dps 5376 090520
TI Dpmark A847-PCB-001 (5.00)	

TI Demmark A847-PCB-001 (5.00)	
COMPLETE LAYOUT SOLD	bps 3276 090520

TIC-HSINK-062(1.00)

Heat sink for 1 PHD package

30.juli 2008
TIC-HSINK-062(1.00).dwg

Jonas L. Holm

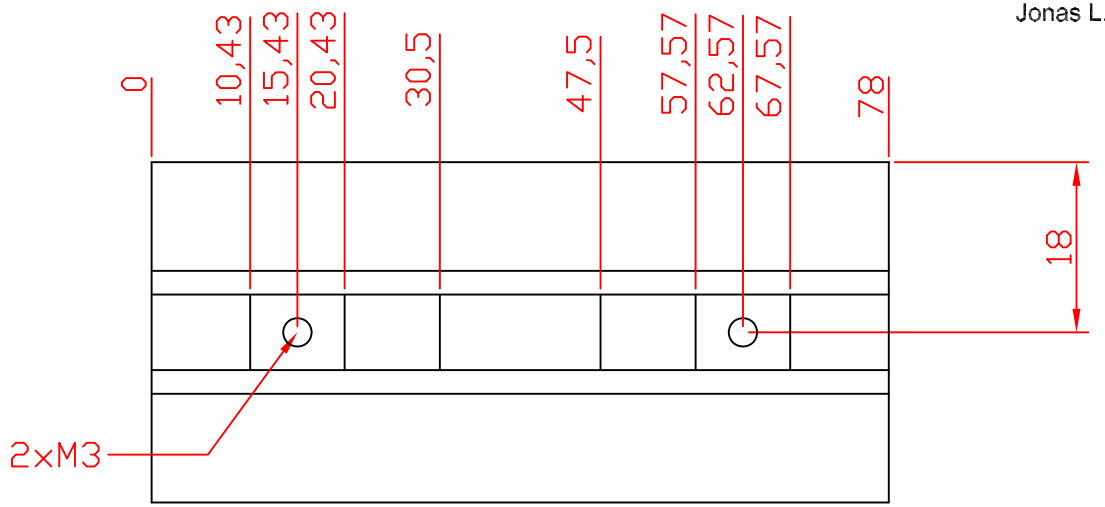

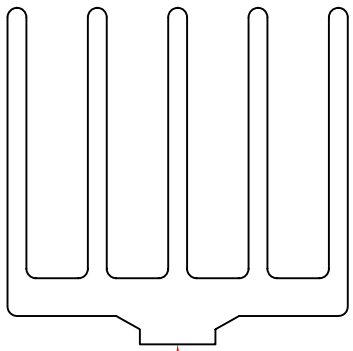

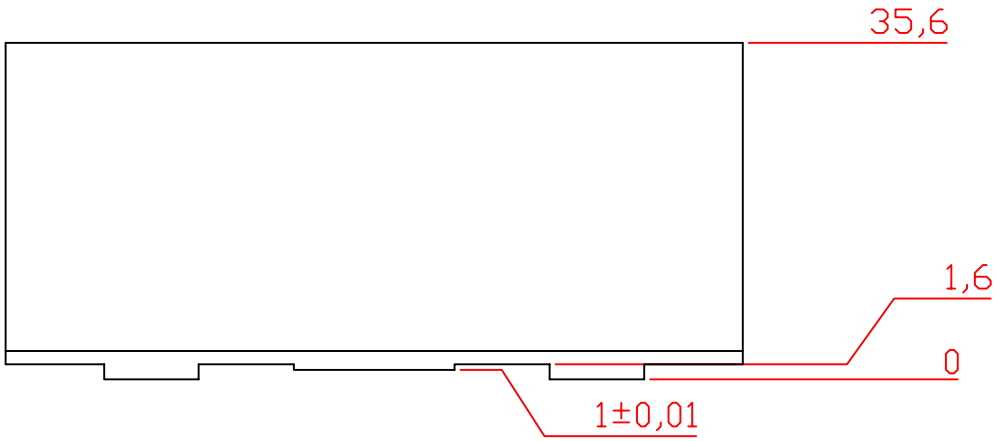

Machine this edge after anodizing

APPROX. SCALE: 1.25:1
DIMENSIONS: mm
MATERIAL: Profile TIC-HSINK-041(1.00), ALUMINUM
SURFACE: FREE OF SHARP EDGES
SURFACE TREATMENT: BLACK ANODIZED
TOLERANCES: +/- 0.1 mm

EVALUATION BOARD/KIT IMPORTANT NOTICE

Texas Instruments (TI) provides the enclosed product(s) under the following conditions:

This evaluation board/kit is intended for use for **ENGINEERING DEVELOPMENT, DEMONSTRATION, OR EVALUATION PURPOSES ONLY** and is not considered by TI to be a finished end-product fit for general consumer use. Persons handling the product(s) must have electronics training and observe good engineering practice standards. As such, the goods being provided are not intended to be complete in terms of required design-, marketing-, and/or manufacturing-related protective considerations, including product safety and environmental measures typically found in end products that incorporate such semiconductor components or circuit boards. This evaluation board/kit does not fall within the scope of the European Union directives regarding electromagnetic compatibility, restricted substances (RoHS), recycling (WEEE), FCC, CE or UL, and therefore may not meet the technical requirements of these directives or other related directives.

Should this evaluation board/kit not meet the specifications indicated in the User's Guide, the board/kit may be returned within 30 days from the date of delivery for a full refund. THE FOREGOING WARRANTY IS THE EXCLUSIVE WARRANTY MADE BY SELLER TO BUYER AND IS IN LIEU OF ALL OTHER WARRANTIES, EXPRESSED, IMPLIED, OR STATUTORY, INCLUDING ANY WARRANTY OF MERCHANTABILITY OR FITNESS FOR ANY PARTICULAR PURPOSE.

The user assumes all responsibility and liability for proper and safe handling of the goods. Further, the user indemnifies TI from all claims arising from the handling or use of the goods. Due to the open construction of the product, it is the user's responsibility to take any and all appropriate precautions with regard to electrostatic discharge.

EXCEPT TO THE EXTENT OF THE INDEMNITY SET FORTH ABOVE, NEITHER PARTY SHALL BE LIABLE TO THE OTHER FOR ANY INDIRECT, SPECIAL, INCIDENTAL, OR CONSEQUENTIAL DAMAGES.

TI currently deals with a variety of customers for products, and therefore our arrangement with the user **is not exclusive.**

TI assumes **no liability for applications assistance, customer product design, software performance, or infringement of patents or services described herein.**

Please read the User's Guide and, specifically, the Warnings and Restrictions notice in the User's Guide prior to handling the product. This notice contains important safety information about temperatures and voltages. For additional information on TI's environmental and/or safety programs, please contact the TI application engineer or visit www.ti.com/esh.

No license is granted under any patent right or other intellectual property right of TI covering or relating to any machine, process, or combination in which such TI products or services might be or are used.

FCC Warning

This evaluation board/kit is intended for use for **ENGINEERING DEVELOPMENT, DEMONSTRATION, OR EVALUATION PURPOSES ONLY** and is not considered by TI to be a finished end-product fit for general consumer use. It generates, uses, and can radiate radio frequency energy and has not been tested for compliance with the limits of computing devices pursuant to part 15 of FCC rules, which are designed to provide reasonable protection against radio frequency interference. Operation of this equipment in other environments may cause interference with radio communications, in which case the user at his own expense will be required to take whatever measures may be required to correct this interference.

EVM WARNINGS AND RESTRICTIONS

It is important to operate this EVM within the input voltage range of 0 V to 50 V for the output stage and 15 V to 20 V for the system supply and the output voltage range of 0 V to 50 V.

Exceeding the specified input range may cause unexpected operation and/or irreversible damage to the EVM. If there are questions concerning the input range, please contact a TI field representative prior to connecting the input power.

Applying loads outside of the specified output range may result in unintended operation and/or possible permanent damage to the EVM. Please consult the EVM User's Guide prior to connecting any load to the EVM output. If there is uncertainty as to the load specification, please contact a TI field representative.

During normal operation, some circuit components may have case temperatures greater than 75°C. The EVM is designed to operate properly with certain components above 75°C as long as the input and output ranges are maintained. These components include but are not limited to linear regulators, switching transistors, pass transistors, and current sense resistors. These types of devices can be identified using the EVM schematic located in the EVM User's Guide. When placing measurement probes near these devices during operation, please be aware that these devices may be very warm to the touch.

Mailing Address: Texas Instruments, Post Office Box 655303, Dallas, Texas 75265
Copyright © 2009, Texas Instruments Incorporated

IMPORTANT NOTICE

Texas Instruments Incorporated and its subsidiaries (TI) reserve the right to make corrections, modifications, enhancements, improvements, and other changes to its products and services at any time and to discontinue any product or service without notice. Customers should obtain the latest relevant information before placing orders and should verify that such information is current and complete. All products are sold subject to TI's terms and conditions of sale supplied at the time of order acknowledgment.

TI warrants performance of its hardware products to the specifications applicable at the time of sale in accordance with TI's standard warranty. Testing and other quality control techniques are used to the extent TI deems necessary to support this warranty. Except where mandated by government requirements, testing of all parameters of each product is not necessarily performed.

TI assumes no liability for applications assistance or customer product design. Customers are responsible for their products and applications using TI components. To minimize the risks associated with customer products and applications, customers should provide adequate design and operating safeguards.

TI does not warrant or represent that any license, either express or implied, is granted under any TI patent right, copyright, mask work right, or other TI intellectual property right relating to any combination, machine, or process in which TI products or services are used. Information published by TI regarding third-party products or services does not constitute a license from TI to use such products or services or a warranty or endorsement thereof. Use of such information may require a license from a third party under the patents or other intellectual property of the third party, or a license from TI under the patents or other intellectual property of TI.

Reproduction of TI information in TI data books or data sheets is permissible only if reproduction is without alteration and is accompanied by all associated warranties, conditions, limitations, and notices. Reproduction of this information with alteration is an unfair and deceptive business practice. TI is not responsible or liable for such altered documentation. Information of third parties may be subject to additional restrictions.

Resale of TI products or services with statements different from or beyond the parameters stated by TI for that product or service voids all express and any implied warranties for the associated TI product or service and is an unfair and deceptive business practice. TI is not responsible or liable for any such statements.

TI products are not authorized for use in safety-critical applications (such as life support) where a failure of the TI product would reasonably be expected to cause severe personal injury or death, unless officers of the parties have executed an agreement specifically governing such use. Buyers represent that they have all necessary expertise in the safety and regulatory ramifications of their applications, and acknowledge and agree that they are solely responsible for all legal, regulatory and safety-related requirements concerning their products and any use of TI products in such safety-critical applications, notwithstanding any applications-related information or support that may be provided by TI. Further, Buyers must fully indemnify TI and its representatives against any damages arising out of the use of TI products in such safety-critical applications.

TI products are neither designed nor intended for use in military/aerospace applications or environments unless the TI products are specifically designated by TI as military-grade or "enhanced plastic." Only products designated by TI as military-grade meet military specifications. Buyers acknowledge and agree that any such use of TI products which TI has not designated as military-grade is solely at the Buyer's risk, and that they are solely responsible for compliance with all legal and regulatory requirements in connection with such use.

TI products are neither designed nor intended for use in automotive applications or environments unless the specific TI products are designated by TI as compliant with ISO/TS 16949 requirements. Buyers acknowledge and agree that, if they use any non-designated products in automotive applications, TI will not be responsible for any failure to meet such requirements.

Following are URLs where you can obtain information on other Texas Instruments products and application solutions:

Products		**Applications**	
Amplifiers	amplifier.ti.com	Audio	www.ti.com/audio
Data Converters	dataconverter.ti.com	Automotive	www.ti.com/automotive
DLP® Products	www.dlp.com	Communications and Telecom	www.ti.com/communications
DSP	dsp.ti.com	Computers and Peripherals	www.ti.com/computers
Clocks and Timers	www.ti.com/clocks	Consumer Electronics	www.ti.com/consumer-apps
Interface	interface.ti.com	Energy	www.ti.com/energy
Logic	logic.ti.com	Industrial	www.ti.com/industrial
Power Mgmt	power.ti.com	Medical	www.ti.com/medical
Microcontrollers	microcontroller.ti.com	Security	www.ti.com/security
RFID	www.ti-rfid.com	Space, Avionics & Defense	www.ti.com/space-avionics-defense
RF/IF and ZigBee® Solutions	www.ti.com/lprf	Video and Imaging	www.ti.com/video
		Wireless	www.ti.com/wireless-apps

Mailing Address: Texas Instruments, Post Office Box 655303, Dallas, Texas 75265
Copyright © 2010, Texas Instruments Incorporated